Georgetown Water Department

COMPREHENSIVE WATER SYSTEM EVALUATION REPORT

FINAL REPORT

Georgetown Water Department

COMPREHENSIVE WATER SYSTEM EVALUATION REPORT

FINAL REPORT

AECOM

AECOM
701Egdewater Drive
Wakefield, MA 01880
www.aecom.com

781-246-5200 tel
781-224-6546 fax

November 20, 2013

Mr. Louis V. Mammolette, P.E., General Manager
Georgetown Water Department
1 Moulton Street
Georgetown, MA 01833

Subject: LETTER OF TRANSMITTAL
Comprehensive Water System Evaluation Final Report

Dear Mr. Mammolette:

In accordance with our Letter Agreement dated July 3, 2013, we are pleased to submit four (4) copies of the Final Comprehensive Water System Evaluation Report. This report provides the following information regarding Town's water system:

- A summary of existing conditions
- A review of previous studies
- An analysis of reducing water age in the distribution system
- A summary of available funding sources for future projects
- Recommended water system improvements

The recommended water sytem improvements are divided into short term, medium term, and long term improvements. An opinion of probable cost is provided for each recommendation, along with estimated annual debt service payments for various repayment terms.

We look forward to continuing to assist Georgetown with the improvement of your finished water quality. Please feel free to contact us if you would like to discuss any topics within this report.

Very truly yours,
AECOM Technical Services, Inc.

Stephen J. DeFrancesco, P.E.
Senior Project Manager

Table of Contents

List of Figures iii

List of Tables iv

List of Appendices v

Introduction 1-1

1.0 Existing Conditions 1-1

1.0.1 Current Water Supply 1-1

1.0.2 Current Water Treatment 1-3

1.0.3 Distribution and Storage 1-5

2.0 Review of Previous Studies 2-1

2.1 Water System Study and Improvement Plan (December 2010) 2-1

2.1.1 Water Sources 2-1

2.1.2 Water Treatment Plant 2-2

2.1.3 Distribution and Storage 2-3

2.1.4 Recommendations 2-3

2.2 Technical Memorandum, Addition of Clearwell and Pump Station (November 2011) 2-5

2.3 Technical Memorandum, Jar Testing (March 2012) 2-7

2.4 Technical Memorandum, Distribution System Water Quality (May 2012) 2-9

2.5 Technical Memorandum, Site Visit to Investigate WTP Issues (November 2012) 2-11

2.6 Technical Memorandum, Clarifier Alternatives (December 2012) 2-13

2.6.1 Dissolved Air Flotation (DAF) 2-16

2.6.2 Package Adsorption Clarifier 2-18

..... 2-20

2.7 Pilot Study Protocol (January 2013) 2-20

2.8 Summary of Recommendations from Previous Studies 2-21

2.8.1 Water System Study and Improvement Plan (December 2010): Recommendations 2-21

2.8.2 Technical Memorandum, Addition of Clearwell and Pump Station (November 2011) 2-22

2.8.3 Technical Memorandum, Jar Testing (March 2012) 2-22

2.8.4 Technical Memorandum, Distribution System Water Quality (May 2012) 2-22

2.8.5 Technical Memorandum, Site Visit (November 2012) 2-23

2.8.6 Technical Memorandum, Clarifier Alternatives (December 2012) 2-23
2.8.7 Pilot Study Protocol (January 2013) 2-23
3.0 Distribution System Analysis 3-1
3.1 Existing Conditions 3-1
3.2 Modeled Scenarios 3-6
3.2.1 Scenario No. 1 – Three Tanks, Mixers, 10 Foot Water Level Change 3-6
3.2.2 Scenario No. 2 – Two Tanks (No Elevated Tank), Mixers, 10 Foot Water Level Change 3-7
3.2.3 Scenario No. 3 – Three Tanks (Two Concrete Tanks, One New Tank, No Elevated Tank), Mixers, 10 Foot Water Level Change 3-8
3.2.4 Scenario No. 4 – Two Tanks (Concrete Tank No. 2 and New Tank, No Elevated or Concrete Tank No. 1), Mixers, 10 Foot Water Level Change 3-9
3.3 Recommendations 3-10
4.0 Chemical Treatment Alternatives for the Existing Georgetown Water System 4-1
4.1 Existing Chemical Feeds 4-1
4.2 Changes to pH Adjustment Strategy 4-4
4.3 Corrosion Inhibitors and Sequesterants 4-8
4.4 Impact of Sulfate on Distribution System 4-10
4.5 Chloramination 4-17
4.6 Summary of Recommendations for Changes to Chemical Treatment 4-19
5.0 Available Funding Sources 5-1
5.1 Massachusetts Drinking Water State Revolving Loan Fund (SRF) 5-1
5.2 USDA Rural Development 5-3
5.3 Legislation Currently being Drafted by the Massachusetts Legislature 5-4
5.4 Local Borrowing 5-4
5.5 Water and Wastewater Rate Relief 5-5
5.6 Capital Funding Recommendations 5-6
6.0 Recommended Water System Improvements 6-1
6.1 Recommended Short Term Improvements 6-1
6.1.1 Distribution System Water Age Reduction 6-2
6.1.2 Water Chemistry Modifications 6-3
6.1.3 Other Recommendations 6-4
6.2 Recommended Medium Term Improvements 6-4

6.3 Recommended Long Term Improvements 6-7
6.4 Recommended Payment Schedules.....6-8
6.5 Recommendation Summary 6-12

List of Figures

Figure 1-1: Location of Georgetown Wells and Treatment Plant 1-2

Figure 1-2: West Street WTP 1-4

Figure 1-3: Location of Storage Tanks 1-7

Figure 2-1: Typical DAF Clarification System 2-17

Figure 2-2: Process Flow Diagram for DAF System 2-18

Figure 2-3: Typical Package Adsorption Clarifier/Filter System 2-19

Figure 2-4: Process Flow Diagram for Packaged Adsorption Clarifier 2-20

Figure 3-1: Existing Elevated Storage Tank 3-2

Figure 3-2: Existing Concrete Storage Tanks 3-2

Figure 3-3: Water Age in Concrete Tanks Under Existing Conditions 3-4

Figure 3-4: Water Age in Elevated Tank Under Existing Conditions 3-4

Figure 3-5: Estimated Water Age Throughout System Under Existing Conditions 3-5

Figure 3-6: Proposed Location of New Tank 3-8

Figure 4-1: Existing Chemical Feeds for the Georgetown MA West Street WTP 4-3

Figure 4-2: Impact of Sulfates on Groundwater Systems 4-12

List of Tables

Table 1-1: Physical Properties of Wells (Water System Study and Improvement Plan 2010) 1-1

Table 1-2: Composite Well Water Quality (2012) 1-3

Table 1-3: Distribution Storage (Water System Study and Improvement Plan (2010) 1-6

Table 2-1: Water Quality Improvements & Cost Estimates (Water System Study and Improvement Plan 2010). 2-5

Table 2-2: Alternate Tank Options (2011) 2-7

Table 2-3: Proposed Pump Information (2011) 2-7

Table 2-4: Summary of Existing Greensand Filter Operating Challenges (2013) 2-14

Table 2-5: Relative Advantages and Disadvantages of Clarifier Alternatives (2013) 2-15

Table 2-6: AECOM Present Worth Cost Summary of Suggested Improvements (2013) 2-16

Table 2-7: Variables Targeted During Pilot Study (2013) 2-21

Table 4-1: Summary of RTW Model Outputs for Georgetown Distribution System (2011) 4-7

Table 4-2: Summary of Tap Water Quality Issues 4-16

Table 6-1: Estimated Capital and Annual Costs for Recommended Improvements 6-9

Table 6-2: Estimated Capital and Annual Costs for Recommended Improvements 6-10

Table 6-3: Estimated Capital and Annual Costs for Recommended Improvements 6-11

List of Appendices

Appendix A Massachusetts DEP Correspondences

Appendix B 0.6 MG Gunite Tank Inspection Report

Introduction

The following report details the general assessment of the Georgetown, Massachusetts water supply system. Special attention has been given to resolving issues that may be causing the aesthetic problems customers are experiencing. The following components of the water system were reviewed as part of this general assessment: treatment, distribution, and storage. The section below describes Georgetown's existing system.

1.0 Existing Conditions

1.0.1 Current Water Supply

Presently, the Georgetown Water Department (GWD) draws water from three (3) wells; Duffy's Landing, Wm. Marshall, and Commissioners. The water from these wells is treated at the West Street Water Treatment Plant (WTP) and distributed through a system of approximately 64 miles of pipe ranging in size from 4 to 12 inches and three storage tanks. The Georgetown Water Department (GWD) services approximately 8,000 customers. The Table 1-1 details physical properties of the wells. An image showing the locations of the wells and WTP can be seen in Figure 1-1.

Table 1-1: Physical Properties of Wells (Water System Study and Improvement Plan 2010)

Supply Facility	Year Constructed	Well Depth (feet)	Well Yield	
			Safe Yield (GPM)	Typical Pumping Rate (GPM)
Wm. Marshall Well	1964	56.65	1,000	250 to 300
Duffy's Landing Well	1996	64.5	1,050	600 to 700
Commissioners Well	1970	38	585	250 to 300
		TOTAL =	**2,635 GPM or 3.79 MGD**	**1,100 to 1,300 or 1.58 MGD to 1.87 MGD**

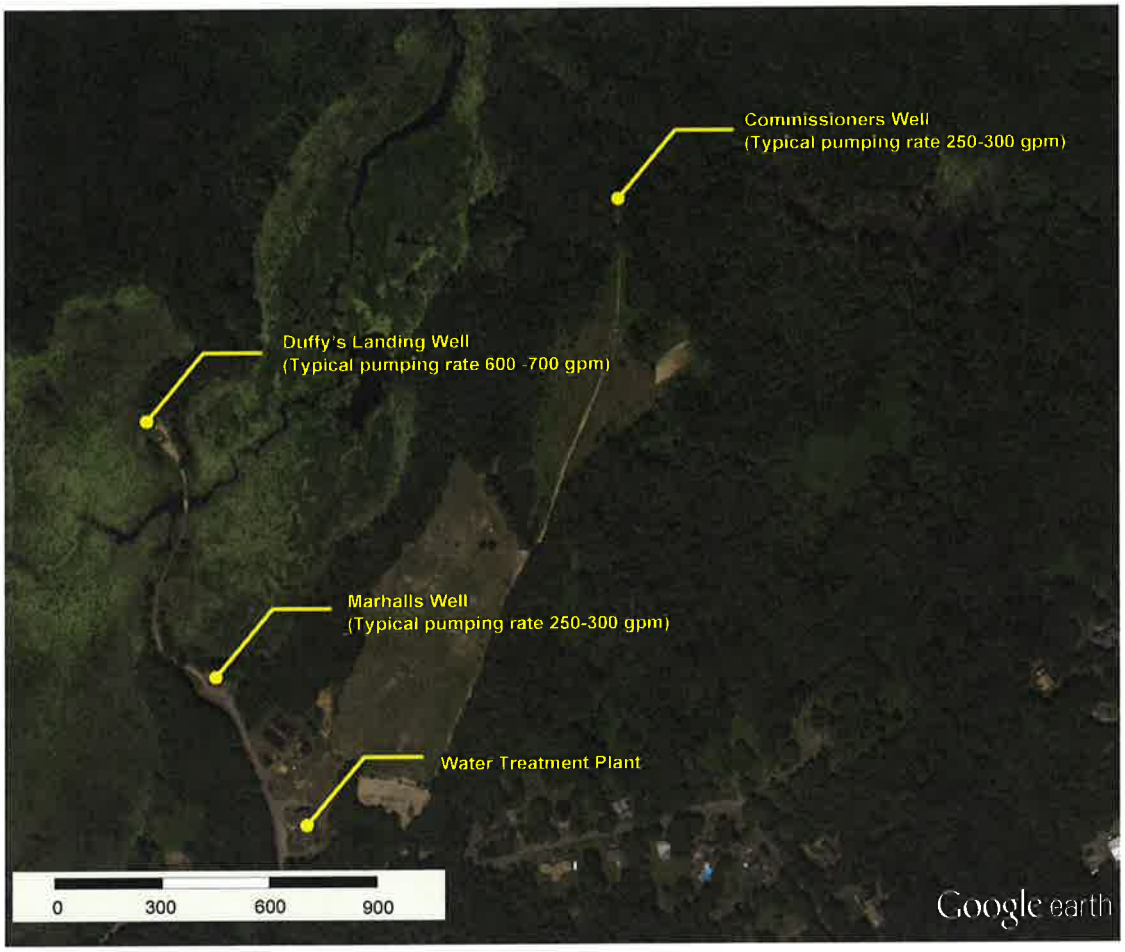

Figure 1-1: Location of Georgetown Wells and Treatment Plant

The water from these wells is blended before undergoing treatment at the West Street WTP, where it is treated to remove the high levels of iron and manganese. Table 1-2, below, shows the combined water quality after blending and as delivered to the water treatment plant.

Table 1-2: Composite Well Water Quality (2012)

Parameter	Units	Combined Raw Groundwater Quality				SMCL*
		2008	2009	2010	2011	
Calcium	mg/L	27	28	24	26	N/A
Iron	**mg/L**	**3.7**	**4.4**	**3.6**	**4.7**	**0.3**
Manganese	**mg/L**	**0.90**	**0.96**	**0.89**	**0.97**	**0.05**
Alkalinity	mg/L	75	70	68	79	N/A
Chloride	mg/L	29	30	19	27	250
Color (Apparent)	CU	150	75	50	100	15
Hardness	mg/L	88	86	76	79	N/A
pH	S.U.	6.3	6.6	6.8	6.8	6.5-8.5
Sulfates	mg/L	21	16	22	21	250
TDS	mg/L	198	172	200	187	500
Turbidity	NTU	16	18	20	16	N/A

*SMCL = Secondary Maximum Contaminant Level

1.0.2 Current Water Treatment

The table above illustrates that the iron and manganese levels are above the Secondary Maximum Contaminant Levels (SMCLs). It is important to note that iron concentrations as currently measured are higher than were found in the late 1990s. For example, samples collected in 1997 showed iron concentrations typically ranging from 1.6 – 2.3 mg/L. This increase in iron is likely the result of the withdraw of older, "deeper" water from continued pumping of the wells. AECOM has observed other groundwater systems in this region where groundwater iron concentrations trend upwards as pumping increases. Manganese has remained fairly consistent.

The SMCLs are set by the EPA to govern the concentration of compounds that cause aesthetic problems, such as taste, odor, discoloration, staining, and scaling concerns. To reduce iron and manganese and

generally improve water quality, the GWD built the 2.5 MGD West Street WTP in 2000. The WTP uses chemical conditioning in combination with two horizontal greensand pressure filters to remove the unwanted constituents.

Section 4 of this report presents a basic process flow schematic. Essentially, well water is pretreated with potassium hydroxide (KOH) for pH adjustment before reaching the plant. Upon entering the plant's treatment train, the water is dosed with sodium hypochlorite (NaOCl) and potassium permanganate ($KMnO_4$). Sodium hypochlorite oxidizes the iron, creating insoluble particles that are removed in filtration, while the potassium permanganate is used for continuous regeneration of the greensand media which then removes manganese through catalytic filtration. The two horizontal pressure filters are divided into 4 cells each, (8 total) and are backwashed using a combination of water from the cells still online and the distribution system. WTP operators maintain filtered water flow to distribution during a backwash event.

Figure 1-2: West Street WTP

The WTP is effective at removing iron and manganese while the plant is at steady state flow conditions, reducing concentrations of both to roughly 0.02 mg/L, well below the SMCLs. However, during flow changes and backwash events, the finished water quality is not consistent, as evidenced by higher levels of iron, turbidity, and manganese measured during a backwash.

1.0.3 Distribution and Storage

The finished water is delivered to customers through a distribution system consisting of approximately 64 miles of pipes and three (3) storage tanks.

Distribution piping ranges in size from 4 to 12 inches in diameter and is comprised of various styles of cast iron or ductile iron pipe, including lined and unlined pipes. The majority of the pipe (roughly 54%) was installed between 1970 and 2009. The distribution system also has several dead-ends, which often times results in stagnant water and can contribute to high water age and odor problems.

The system has five (5) interconnections for emergency use; one connection with Groveland, two with Rowley, and two with Byfield. All three of these water systems that connect with Georgetown are at a lower pressure gradient. This means that water can flow towards the interconnections from Georgetown's system but cannot feed back into Georgetown's systems without booster pumps. One of the connections to Byfield (located at North Street) has a pressure reducing valve, allowing water to only flow to Byfield at that location.

The distribution system currently includes three (3) storage tanks to help meet fire flows and peak demands. Table 1-3 summarizes the details of the storage tanks.

Table 1-3: Distribution Storage (Water System Study and Improvement Plan (2010)

Storage Tank	Volume (gal)	Year Installed	Diameter (ft)	Water Depth (ft)
Elevated Tank	300,000	1935	42	29
Concrete Reservoir No. 1	600,000	1961	64	25
Concrete Reservoir No. 2	600,000	1977	64	25

The distribution storage tanks are in need of repairs and contributing to high water age in the system. The elevated tank is the oldest. In 2009, this tank has had several structural repairs made. Concrete Tank No. 1 was inspected in 2009 (inspection report provided in Appendix B), receiving an interior rating of "good" and an exterior rating of "fair." Repairs to the gunite, dome ring, hatches, and ladder were suggested. Concrete Tank No. 2 was inspected in 2008 and was rated as "very good" to "excellent" for interior and exterior. Figure 1-3 shows the locations of the tanks in relationship to the water treatment plant.

Figure 1-3: Location of Storage Tanks

2.0 Review of Previous Studies

AECOM and another consultant have prepared a number of reports and technical memoranda since 2010. These documents provided a review of various components of the water system and generally provided recommendations for improvements. This section provides a summary of these documents, which are listed in chronological order below.

- Water System Study and Improvement Plan (December 2010)
- Technical Memorandum, Addition of Clearwell and Pump Station (November 2011)
- Technical Memorandum, Jar Testing (March 2012)
- Technical Memorandum, Distribution System Water Quality (May 2012)
- Technical Memorandum, Site Visit to Investigate WTP Issues (November 2012)
- Technical Memorandum, Clarifier Alternatives (December 2012)
- Pilot Study Protocol (January 2013)

In addition to these reports and memoranda, there have been communications with the Massachusetts Department of Environmental Protection (DEP). These are included in Appendix A.

2.1 Water System Study and Improvement Plan (December 2010)

The report title "Water System Study and Improvement Plan" was submitted to the Town in December of 2010. This report provided an evaluation of the entire water system for Georgetown, covering everything from source water through distribution. The following sections will provide some detail regarding the findings of the report.

2.1.1 Water Sources

The three wells used by the town can produce a maximum of 3.1 million gallons per day (MGD) as authorized by the Massachusetts Water Management Act (WMA). The WMA permit held by the Town

also allows a maximum annual average withdrawal of 0.73 MGD. To model the adequacy of the wells for future demands on the system, the consultant chose to assume that the largest well (Duffy's Landing) was offline, thus providing a safe yield of 1.58 MGD. Using these parameters, under the projected maximum day demand for year 2025 and 2030, deficits of 0.05 and 0.10 MGD were projected. The consultant recommended: 1) no additional source development was necessary, 2) update the supply capacity every five years.

2.1.2 Water Treatment Plant

An investigation of the West Street Water Treatment plant found several issues pertaining to the filters. The report briefly discusses the issues listed below, which were outlined in a report written by a Tonka technician (the filter manufacturer) following an inspection in March 2010.

- Difficulty with backwash rate due to distribution water quality and pressure problems
- Short filter run times (as short as 16 hours)
- Media channeling and mud-balling
- Ineffective backwash to clean filters
- Coating deterioration and rusting inside the vessels

Following the inspection, Tonka recommended pre-filtration pH adjustment to a pH of approximately 7.2 s.u. – 7.5 s.u. to provide more effective filtration. They also recommended that the chlorination point be relocated to allow for more contact time for the oxidation of iron.

Based on these issues and several other water quality issues including odor, color, and low chlorine residual, the December 2010 report recommended the installation of a clearwell, or finished water storage tank. The addition of a clearwell would provide a dedicated source for backwash water when needed, allowing the plant operators to backwash at a higher rate. It would also provide longer chlorine contact time, increasing the chlorine residual within the system.

2.1.3 Distribution and Storage

The December 2010 report investigated storage capacity under varying conditions, finding that for flow equalization and fire flow ample storage is available for the planning period (through 2030). Other issues identified that are related to the storage tanks are high water age and low pressures at some points of the system.

Water age was found to approach 14 days in both concrete tanks (this number was found to be incorrect during the present study with the age being much higher), while only approaching eight days in the elevated storage tank. To correct this issue as well as the low pressures experienced on the east side of the distribution system, it was suggested that a mixing system be added to Concrete Tank No. 2, a pump storage reservoir be constructed on the east side of the system, and repairs should be made to the elevated storage tank in accordance with the findings of the Merithew Inc. inspection.

The 64 miles of distribution system was determined to be adequate, but several recommendations were made to improve water quality. These include replacing several stretches of pipe as well as developing a flushing plan. The report notes that replacing several mains is necessary due to their age (approaching 80 years old), as well as to ensure adequate flows under the highest demands and remove any pipes that may be affected by biofilm build up. The flushing plan could help alleviate water age problems within the system that are brought on by dead ends and water age.

2.1.4 Recommendations

Many suggestions for solving the water quality issues were made in the December 2010 report. Table 2-1, below, is from that report which details the suggestions, priority for completion, and cost estimates. The cost estimates were generated at the time the report was submitted (2010) and would need to be adjusted.

It should be noted that all the improvements listed under the "Water Distribution" section of Table 2-1 are water main replacements except for the entries "Andover Street – Clean Main" and "North Street – Clean Main." Those two entries are suggesting that the water mains be cleaned to remove any build up within the pipe (the report suggests biofilm). The entries within this section that are shaded in grey are recommended water main replacements; the first five being necessary to meet ISO fire flow demands, while the last seven entries are water main replacements necessary to correct residential fire flow deficiencies.

At this time, we believe that the replacement of water mains should be given a low priority in terms of near-future capital improvements. We have not seen any information that shows that Georgetown is experiencing a high level of water main breaks, and most of the available fire flow measurements were approximately 2,000 gpm or greater.

Table 2-1: Water Quality Improvements & Cost Estimates (Water System Study and Improvement Plan 2010).

Item	Priority			Budget Amount
	High	Medium	Low	
Water Treatment				
Modify Chemical feed Systems	X			$75,000
Construct Aeration system, clearwell/backwash supply storage tank and pumping system	X			$975,000
Filter Sand Blasting and repainting		X		$80,000
Filter Media Replacement		X		$160,000
Chloramine Chemical Feed System			X	$85,000
Additional Filtration Vessel			X	$400,000
Total				**$1,775,000**
Distribution Storage				
Mixing System in Concrete Tank No. 2	X			$75,000
Construct Pump Storage reservoir on Long Hill Site		X		$2,565,000
Repair and Repaint Elevated Tank		X		$350,000
Total				**$2,990,000**
Water Distribution				
Canterbury Dr. at Andover Street – 300 FT		X		$49,500
East Main Street – Elm Street to North Street – 2,300 FT		X		$379,500
East Main Street – Elm Street to existing 12" – 2,600 FT		X		$429,000
Tenney Street – East Main Street to existing 12" – 3,000 FT		X		$495,000
North Street – Main Street to Mill Street – 3,200 FT	X			$528,000
Andover Street – Clean Main	X			$48,000
North Street – Clean Main	X			$41,600
Jewett Street – Thurlow to Rt 95	X			$363,000
East Street – 1,600			X	$240,000
Central Street – 2,800			X	$420,000
Andover Street – 2,300			X	$345,000
Spofford Street – 200			X	$30,000
Hardy Terrace – 1,100			X	$165,000
Thurlow Street – 2,600			X	$390,000
Total				**$3,923,600**

2.2 Technical Memorandum, Addition of Clearwell and Pump Station (November 2011)

This memorandum was prepared by AECOM for Georgetown and investigated the addition of a finished water storage tank (clearwell) and pumping station at the existing WTP. These facilities were highly recommended in the December 2010 report. The clearwell would hold water as it exited the filtration process. Benefits of adding a clearwell pertaining to distribution storage are as follows.

- Operational flexibility to take the WTP offline for a period of time with the distribution system supplied from the clearwell,
- Consistent flow, pressure, and chlorine residual to the distribution system,
- Additional chlorine contact time should the wells ever be reclassified as under the influence of surface water,
- A method of volatilizing hydrogen sulfide prior to the distribution system, and

The memorandum also highlighted benefits of adding a clearwell with regards to backwash storage, which are presented below.

- Eliminate the pressure swings, filter surges, and flow direction changes experienced in the distribution system during a backwash, and
- Eliminate the distribution supply reduction that occurs during a backwash as stored water can still be pumped into the distribution system during a backwash using the distribution pumps.

The suggested clearwell would be made of pre-cast concrete, due to its low maintenance and the ability to bury a portion of it if necessary. It would be sized to hold 500,000 gallons, based on the requirements of 100,000 gallons for backwash storage and 375,000 gallons for distribution storage. Based on discussions with tank manufacturers, a 500,000 gallon tank is the most economical size.

The addition of the clearwell and pumping station would decouple the WTP from the distribution system, avoiding pressure drops and transient flow conditions created during backwash events. The backwash events would follow the same procedure currently used (filtered water from online cells washes one cell that is being backwashed), but the clearwell would be able to supply additional water as needed. Also, should the clearwell need to be taken offline, the WTP operation would not be adversely impacted. The table below shows tank options considered by AECOM.

Table 2-2: Alternate Tank Options (2011)

Tank	Supplier	Volume (gal)	Diameter (ft)	SWD (ft)	Approximate Cost
Pre-Cast Concrete	Natgun	500,000	58.5	25	$555,000
Welded Steel	CBI	517,000	46.9	40	$500,000
Bolted Steel	AquaStore	504,000	56	28.5	$410,000

The proposed pump station that would accompany the clearwell would be able to meet the demands associated with backwashing one filter cell as well as distribution demands. Pump information is provided below.

Table 2-3: Proposed Pump Information (2011)

Pump	No.	Type	Flow	Head	Motor
Distribution	2 (duty/standby)	Double Suction	1,175 gpm	230 ft	100 HP
Backwash	1 (no standby)	Double Suction	1,050 gpm	230 ft*	100 HP*

To summarize, recommendations made by this report included:

- Construct a 500,000 gallon pre-cast concrete clearwell at the WTP (tank alternatives and specifications provided in Table 2-2)
- Construct a pumping station to accompany the clearwell (pump specifications provided in Table 2-3)

2.3 Technical Memorandum, Jar Testing (March 2012)

At the request of the Georgetown Water Department, AECOM performed four jar tests on the influent water to determine the following:

- Can sodium hypochlorite be used to reduce current potassium permanganate dosing costs and oxidize iron and manganese?

- If so, what would be the parameters to provide successful treatment?

- Would a coagulant or polymer aid in the removal process of iron and manganese through filtration?
  - If so, what would be the dosing conditions?
- Can the pH be raised in one step (i.e. prior to the filters) instead of a two-step process of prior to the filter and after the filter?

The jar test showed that sodium hypochlorite could be used to oxidize iron to a filterable state, but, under the given detention time constraints, could not oxidize manganese effectively. It was recommended that 60 seconds be allowed for iron oxidation with chlorine before potassium permanganate addition. By using sodium hypochlorite prior to the addition of potassium permanganate, potassium permanganate demand is reduced. It also increases the flexibility in the potassium permanganate dosing. This reduces the annual chemical costs. AECOM did warn that a residual of 0.2 mg Cl_2/L or higher as free should be maintained through the filter to keep it in an active state. High concentrations of manganese can interfere with the DPD testing method, and the operator should check residual chlorine periodically using other testing methods, like titration.

Coagulant and polymer testing suggested that a nonionic polymer alone performed the best, but a scaled version of the filters was not available to test the effect of adding polymer to the filters. AECOM recommended obtaining a small scale unit to test this. AECOM cautioned that the run times of the filters could be significantly reduced if polymer is added.

Testing of the influent water at a high pH (7.5-8.0) was not performed in the jar tests. Literature suggests that most of the physical processes involved in the jar tests would be improved with a slight increase in the pH from 7.0 to 7.5, which allows for a one time addition of caustic instead of incremental dosing. AECOM recommended testing with a small filter column to further asses this topic.

In summary, the jar testing led to the following results and recommendations:

- Continue to use sodium hypochlorite to oxidize iron to a filterable state, but locate the injection point further upstream of the plant to provide more oxidation detention time
- Nonionic polymer could be used to help remove Fe and Mn
- Literature suggests most physical processes would be improved if pH increased from 7.0 to 7.5 (however, when using continuous regeneration of greensand with permanganate, and when removal of iron is a primary objective (both of which apply to Georgetown), the filter manufacturer recommends a pH of 6.8-7.0 ahead of filtration).

2.4 Technical Memorandum, Distribution System Water Quality (May 2012)

This technical memorandum, prepared by AECOM, investigated distribution system water quality based on data provided by the Town and some studies performed by AECOM. The memorandum noted that the blended raw water concentrations of iron, manganese, and color were high for greensand filtration technology (4.4 mg/L, 0.94 mg/L, and 81 CU respectively). The studies found that Cell No. 3 on Filter Train No. 2 was releasing iron and manganese concentrations that exceeded the secondary maximum contaminant level (SMCL) during backwashing. The filter cell issue was being investigated by the Town and the filter manufacturer.

A corrosivity model was run and determined that the water has a negative Langlier saturation Index (LSI), which means it has corrosive tendencies. To control this by adjusting pH only, the Town should strive to achieve a finished water pH of approximately 7.5 s.u.

Based on the concentrations of chlorine in the distribution system storage tanks following the increase of chlorine applied at the water treatment plant (WTP), it appeared as though the concentration in the

concrete tanks increased very little (no more than 0.1 mg/L). This suggests that the concrete tanks are not receiving or distributing much water, likely caused by their size, location, and lack of mixing.

Raw water was tested by two separate labs for total organic carbon (TOC), which can consume chlorine residual. Both laboratories gave very different results, but the more likely of the two was a laboratory from Rhode Island, who's report stated that the TOC level was between 1-2 mg/L. These levels will lead to some chlorine residual consumption.

In this memo, AECOM made the following recommendations designed to solve the problems noted.

- Construct a clearwell
    - This would provide clean filter backwash water and provide additional chlorine contact time
    - This would eliminate pressure swings and transient flow conditions experienced during backwashing
    - This would also serve as a location for the addition of sodium hypochlorite after the initial demand has occurred
- Install a control valve at the elevated storage tank or remove elevated storage tank (system hydraulics permitting)
    - Would allow for more water change-over in the concrete tanks
- Addition of in-tank mixers would be beneficial for water turn over
- Construct a new sodium hypochlorite chemical injection vault on the raw water line between the wells and WTP
    - As mentioned in the jar testing study, this modification will reduce the amount of potassium permanganate needed for manganese oxidation

2.5 Technical Memorandum, Site Visit to Investigate WTP Issues (November 2012)

This memorandum addressed the site visit made to the Georgetown WTP and Marshall wellhouse on Wednesday, November 21st, 2012. This site visit was made in response to difficulty operators were reporting with greensand filter operating pressures and inability to optimize filtered water quality. The following correspondence was provided to AECOM by Georgetown's WTP chief operator:

- Filters have been constantly reducing Fe/Mn concentrations to 0.02 mg/L prior to backwash, but the filters have developed headloss more rapidly than in the past. The operators feel that the filters are clogged somehow.
- Post-filtration chlorine residual is typically 0.15-0.2 mg/L free Cl2.
- Raw water temperature now is 14 C and usually runs between 14 and 15 C consistently.
- Best $KMnO_4$ dose is at 4.5 mg/l but when raised to 4.75 mg/l, saw a slight improvement in filtered water turbidity. Reluctant to go too much higher due to pink water carryover concern.
- Filters contain 10-inches of anthracite and 24-inches of greensand.
- Recent filters evaluations (Spring 2011) have shown that the greensand media is in good shape. There is no data on the condition of the anthracite. They do not use Greensand Plus.

The chief operator explained that historically, over 2 years ago, operators could run the filters until the differential pressure (DP) reached 5.5 psi or higher. Recently, they have discovered that at 4 psi, they start to see yellow water and higher turbidity in the filtered water. This is thought to be principally iron breakthrough. Also, when operating at pressure up to 4 psi, the backwash process negatively impacts the treated water by allowing color and high turbidity into the system.

This memorandum also noted that every time a wash is initiated, regardless of the initial conditions, a sharp spike in differential pressure (DP) occurs when transitioning into the high rate wash. It was

observed, during backwashing on Nov 21, that this DP in the main header rose from 1.5 psi to 4 psi over 2 seconds, then dropped back down to 1.5 psi. This is the likely effect of a fast acting backwash water (BWW) inlet valve for the filter in wash mode. It is thought that this "pulses" the filter and releases material off of the media grains and into the finished water.

The memorandum stated that the system is suffering from a combination of hydraulic problems (release of low quality water into the system during backwashing), lack of flexibility in chemical treatments, and an apparent organic complexing of iron and manganese. Tonka (the filter manufacturer) has previously suggested that iron is complexing with ammonia. Raw water ammonia and total organic carbon (TOC) levels were noted as favorable for complexing to occur.

Complexing is the process where Iron ions react with aqueous ammonia to form "clumps" of red-brown $Fe(OH)_3$. The AWWA Iron and Manganese Removal Handbook says oxidizing organically bound iron and manganese may or may not be successful. A suggestion that a non-ionic or anionic polymer may help agglomerate the organically bound particles was made at the time the memo was written.

To deal with ammonia in the raw water, oxidation through breakpoint chlorination was suggested. However, it was mentioned that there would be high potential for disinfection by-product formation due to the levels of TOC.

About two months prior to the visit, operators set the protocol for washing at a DP of 2.5 psi, which maintained the ability to provide good water quality with regard to iron and manganese. This lead to more frequent backwashing than they wanted. The following suggestions were made during the visit and reiterated in the memorandum:

- Continue with the frequent washing
- Wash with more water

- Check depth of media, particularly anthracite
- Reduce feed pH. With continuous regeneration, should be feeding at 6.8-7.0. Tonka concurs.
- Use a two-point pH adjustment approach. If the operators could raise pH from low 6's in raw to about 6.8 pre-filtration, this would work for the filtration process, then raise it again from 6.8 to 7.2 or more for distribution. This would require a post-filtration chemical feed system to dose caustic. There is space for this in the old lime area, but the metering pumps, day tanks, and the I&C would need to be added.
- Minimize shock to hydraulics during high-rate wash. To dampen the operation of the opening of the BWW inlet valve during high rate backwash valve, put an isolation valve on the SWW pipeline (an orifice plate in the SWW pipe actually controls the high rate backwash flow). This valve would be closed at the start of the high rate backwashing, and after the BWW inlet valve to the filter opens, the isolation valve would open but gradually, over the course of 10 seconds or so (programmable).

2.6 Technical Memorandum, Clarifier Alternatives (December 2012)

The WTP is experiencing a number of challenges that need to be addressed. In the December 2012 report, AECOM evaluated four clarifier alternatives for the Georgetown WTP. Table 2-4 lists the existing WTP challenges which a clarifier and clearwell would improve.

Table 2-4: Summary of Existing Greensand Filter Operating Challenges (2013)

Item No.	Challenge	Possible Solution
1) Backwash Water Hydraulics	Backwashing the operating filters creates flow transient conditions in the system, subjects the combined filtered water to periods of poor water quality which ends up in the distribution system, and creates pressure surges for the filter cell being washed.	A separate, dedicated backwash water holding tank would allow washing of one filter cell without interference with other filter cells or disruption of distribution system hydraulics. A combined backwash water holding tank/clearwell would greatly protect finished water quality.
2) High Raw Water Iron	Oxidized iron quickly plugging anthracite cap and shortening filter runs.	A pre-treatment step ahead of the greensand filter, dedicated for iron removal and organics reduction would allow the greensand system to target manganese only, improving overall efficiency.
3) Organics Complexing	Presence of ammonia and TOC creating a challenge for direct filtration with anthracite and greensand due to complexing with iron and manganese.	A clarifier that can remove oxidized and complexed iron "clumps" and some manganese, while also providing some organics reduction through coagulation & flocculation. This will greatly assist greensand filtration.

AECOM evaluated four clarifier options. These four options included Dissolved Air Flotation (DAF), Actiflo, package adsorption clarifiers, and ultrafiltration (UF) membranes. The four options were evaluated on the following criteria: effectiveness of treatment, ease of operation, footprint, and cost (both capital and operation and maintenance). The following table provides a brief overview of advantages and disadvantages of each technology.

Table 2-5: Relative Advantages and Disadvantages of Clarifier Alternatives (2013)

Process	Advantages	Disadvantages
DAF	• Effective at iron and manganese removal • Very effective at organics removal • High solids concentration of DAF residuals • Non-proprietary • Simple and reliable operation.	• Less effective with high turbidity source • Moderate energy cost due to compressed air requirement
Actiflo	• Effective at iron and manganese removals • Compact footprint • Reliable operation • Handles changes to raw water quality well	• Can fail upon loss of polymer or microsand • Potential for polymer carryover to filters • Abrasion of equipment due to sand • Low solids concentration in clarified sludge
Package adsorption clarifier	• Effective at iron and manganese removal • Compact footprint • Modular system • Low cost	• Less robust and cannot tolerate high levels of iron • Low solids concentration in clarified sludge • High quantity of residuals (SWW) as clarifiers and filters are backwashed
Membranes	• High treated water quality • Easily handles raw water quality changes • Provides absolute barrier to pathogens • Compact footprint • No media filters required	• High energy costs • Membranes must be replaced periodically • Cleaning chemical residuals disposal • Integrity must be monitored daily • Cannot remove soluble Fe or Mn

This memorandum recommends that the existing WTP is replaced with a new WTP that includes dissolved air flotation (DAF) followed by gravity filtration. Package adsorption clarifiers are a more cost effective than a DAF system, but AECOM believes they are less effective due to the high volume of wash water that would be created when during backwashing. DAF systems produce a dense sludge, which is favorable from a residuals handling aspect. Pilot testing was recommended for both systems with hopes of proving the effectiveness of the DAF. More information can be found in the following section, 2.6, which details the Pilot Study Protocol that was submitted in January 2013. The following table provides a cost estimate for each alternative evaluated. These estimates were generated by AECOM at the time of the evaluation.

Table 2-6: AECOM Present Worth Cost Summary of Suggested Improvements (2013)

Alternative	DAF	Actiflo™	Pacer II®	Membranes
Annual O&M Cost	$ 181,064	$ 208,850	$ 156,627	$ 230,381
Electricity	144,338	136,637	120,175	140,996
Chemical	24,959	25,513	24,024	37,875
Maintenance/Replacement	11,767	46,700	12,428	51,510
Present Worth O&M	3,048,182	3,515,965	2,636,793	3,878,437
Capital	8,536,655	11,756,422	7,930,628	9,234,056
Net Present Value	**$ 11,580,000**	**$ 15,270,000**	**$ 10,570,000**	**$ 13,110,000**

Presented below is an overview of the technologies recommended by AECOM based on the analysis performed in this memorandum. The primary recommendation, DAF, is explained first, followed by the package adsorption clarifier system (Pacer II in Table 2-6 above).

2.6.1 Dissolved Air Flotation (DAF)

DAF utilizes a very similar chemical dosing scheme as the packaged adsorption clarifier, but achieves its results very differently. Once flocculation has occurred in the flocculation tanks, the water enters the DAF zone, where micro- bubbles float the flocs to the surface for removal. The micro-bubbles are created by recycling a portion of the DAF effluent through a saturation system where it is supersaturated with air under high pressure. The supersaturated water is then released at the dispersion zone (entrance to the DAF tank). The sudden lack of pressure causes micro-bubbles to form, which float the flocs to the surface where they form a floating layer that is scraped periodically to make room for more.

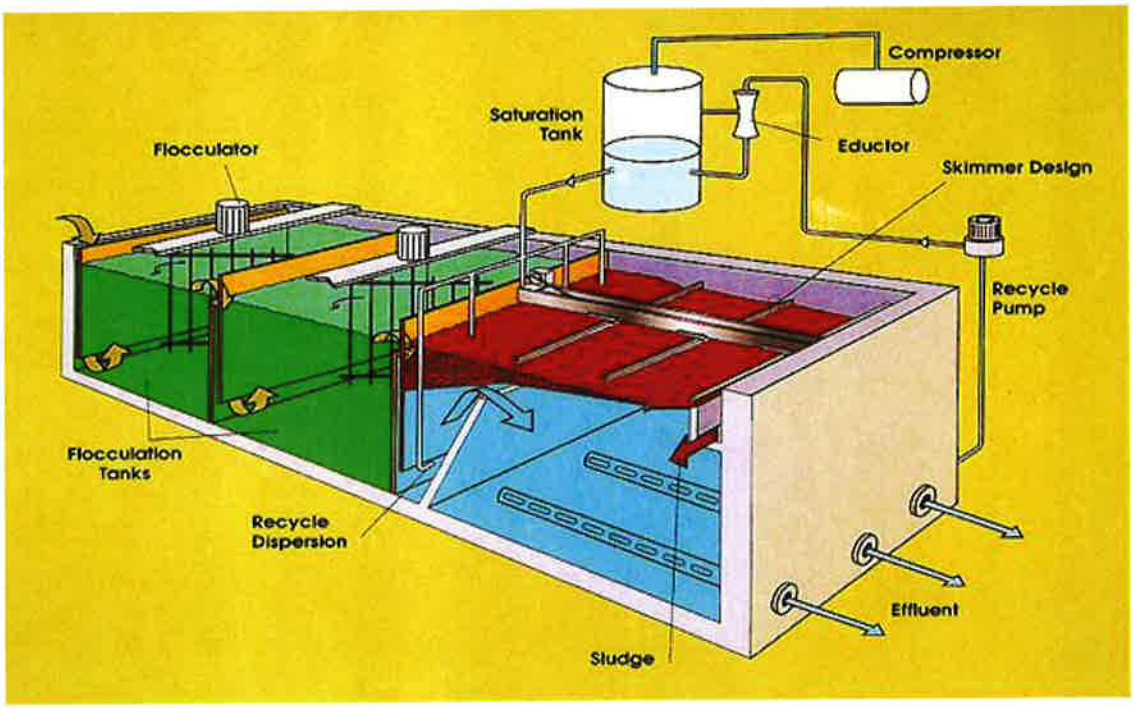

Figure 2-1: Typical DAF Clarification System

The DAF system would work in junction with a traditional dual media gravity filter, comprised of anthracite over greensand plus (GSP). This filter would be used primarily to remove manganese, because the DAF would remove most iron, color, and TOC. If raw water turbidity is less than about 80 NTU, DAF can usually achieve effluents of <0.5 NTU. Below is a schematic detailing chemicals used, chemical addition points, backwashing considerations (filter only), and residual handling.

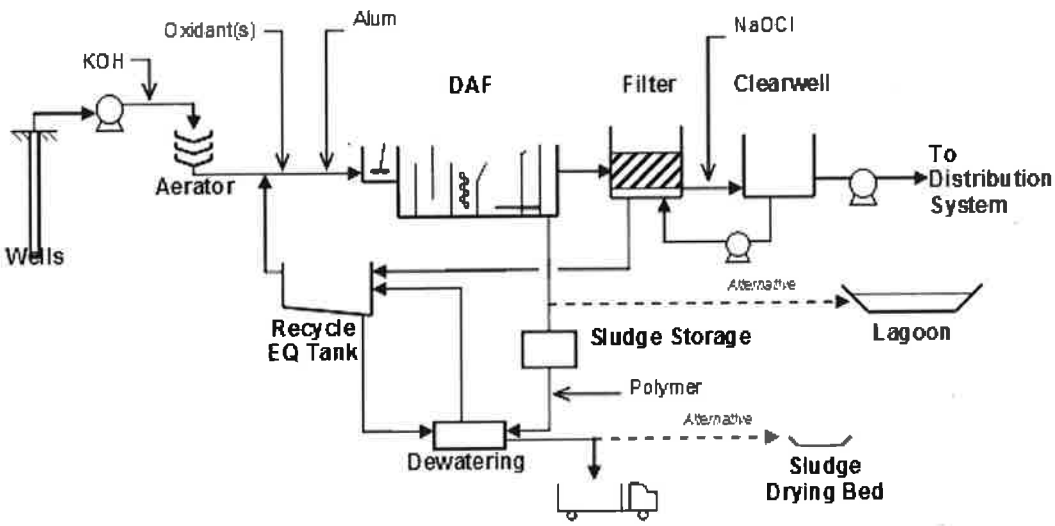

Figure 2-2: Process Flow Diagram for DAF System

2.6.2 Package Adsorption Clarifier

This technology combines an adsorption clarifier ("roughing filter") with a traditional gravity filter in a single tank (seen in Figure 2-3 below). Water is chemically treated before flowing up through the adsorption clarifier, where flocculation is promoted by the interstitial velocity and scouring that occurs. Upon exiting the top of the adsorption clarifier, the water is directed into the gravity filter, in this case the media would be anthracite over Greensand Plus (GSP).

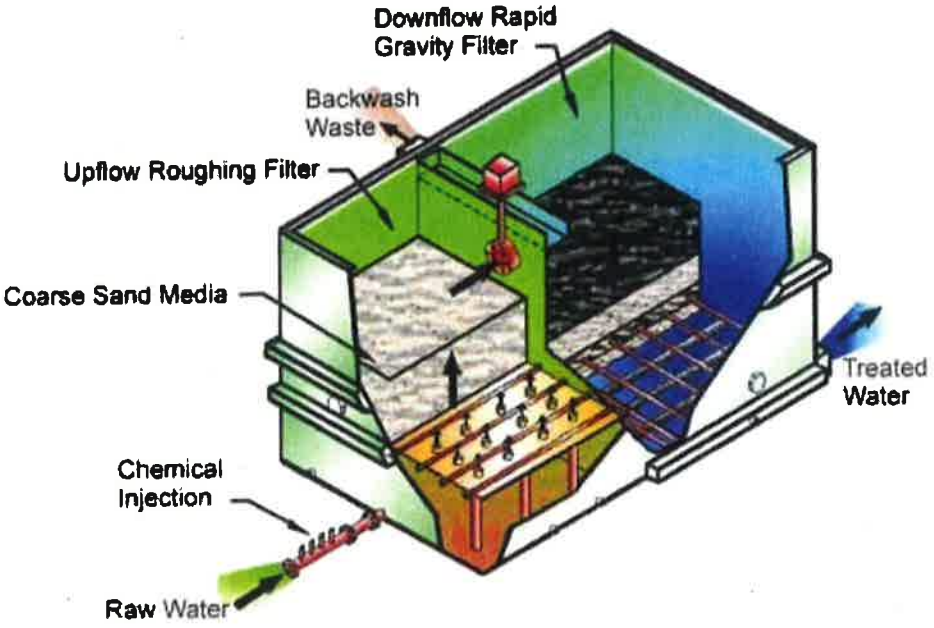

Figure 2-3: Typical Package Adsorption Clarifier/Filter System

Both components of this system do require backwashing periodically. The adsorption clarifier is backwashed using raw water combined with an air scour, while the filter would be backwashed using water from the clearwell (low and high rate), as well as an air scour. The flow diagram below details the backwash considerations as well as chemical addition points, types of chemicals used, and residuals handling.

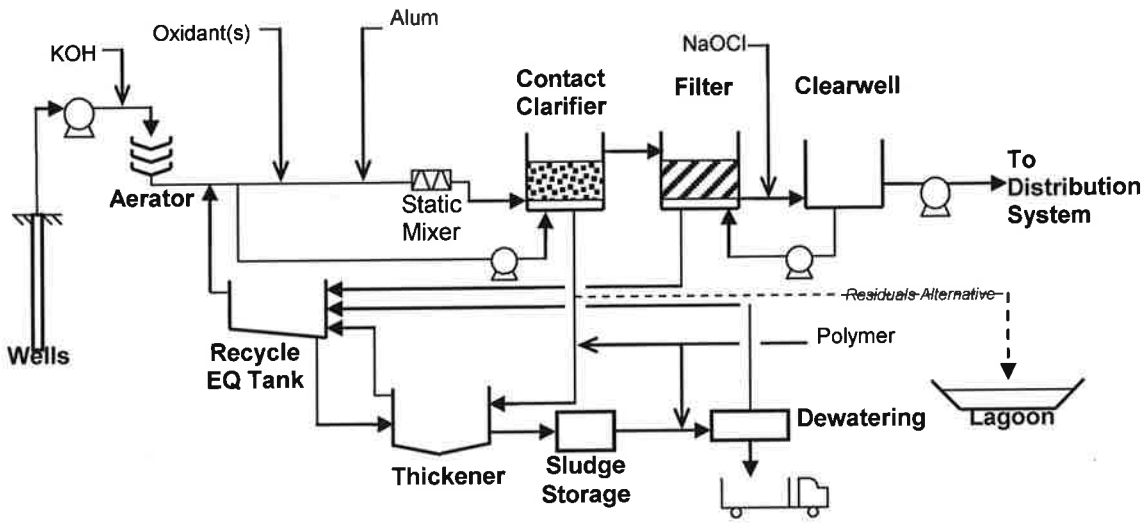

Figure 2-4: Process Flow Diagram for Packaged Adsorption Clarifier

2.7 Pilot Study Protocol (January 2013)

Following the evaluation of clarifier alternatives, AECOM prepared a proposal to conduct a pilot study. Based on the evaluation criteria discussed previously, AECOM proposed the piloting of two technologies: dissolved air flotation (DAF) and package adsorption clarifiers.

It was proposed that these systems would be pilot tested when Duffy's Well is operating at a high rate, which is typically in the summer. This is the case because more water is produced during the summer and Duffy's Well can produce the most water. Duffy's well also has the lowest quality water of the three wells. These two factors together represent the greatest strain placed on the WTP. The table below shows independent and dependent variables considered in this study. During "runs," the independent variables will be kept constant, but over the course of the study they will be altered. A run will be stopped when:

- Maximum filter headloss reaches 3.5 psi (8 feet)
- Turbidity, iron, or manganese breakthrough is observed

- Or if 48 hours elapses without either of the first two conditions being met

Table 2-7: Variables Targeted During Pilot Study (2013)

Independent Variables	Dependent Variables
Source water quality	▪ Coagulation effectiveness ▪ Oxidant demand ▪ DAF and filter loading rates
Pre-oxidation conditions (contact time, pH, pre-oxidant type and dose)	▪ Oxidation of Fe & Mn and performance of greensand filters
Coagulation Chemistry	▪ Clarified water turbidity impact on filter operations ▪ Solids concentration ▪ Removal of organics
pH adjustment	▪ Removal of organics
Recycle rates (DAF)	▪ Clarified water turbidity ▪ Solids concentration
AC clarifier, DAF, and filter hydraulic loading rates	▪ Clarified water turbidity ▪ Impact on filter operations including filter run times

2.8 Summary of Recommendations from Previous Studies

Each study discussed in the previous sections made recommendations aimed at improving the water quality delivered to the Georgetown Water Department's customers. Included below is a complete list of the recommendations that were included in previous reports.

2.8.1 Water System Study and Improvement Plan (December 2010): Recommendations

The following is a list of recommendations made in the December 2010 report. For a tabulated list, please see Table 2-1.

- Modify chemical feed systems
- Construct aeration system, clearwell/backwash supply storage tank, and pumping station
- Filter sand blasting and repainting
- Filter media replacement

- Chloramine chemical feed system
- Additional filtration vessel
- Mixing system in Concrete Tank No. 2
- Construct pump storage reservoir on Long Hill Site
- Repair and repaint elevated tank
- Replace or clean water mains (for complete reference of locations and lengths, please see Table 2-1)

2.8.2 Technical Memorandum, Addition of Clearwell and Pump Station (November 2011)

The following is a list of recommendations made in the November 2011 technical memorandum.

- Construct a 500,000 gallon pre-cast concrete clearwell at the WTP (tank alternatives and specifications provided in Table 2-2)
- Construct a pumping station to accompany the clearwell (pump specifications provided in Table 2-3)

2.8.3 Technical Memorandum, Jar Testing (March 2012)

The following is a list of recommendations made in the March 2012 technical memorandum.

- Use sodium hypochlorite to oxidize iron to a filterable state, add the hypochlorite further upstream of the plant for more oxidation detention time
- Nonionic polymer could be used to help remove Fe and Mn
- Recommend a test using a filter column

2.8.4 Technical Memorandum, Distribution System Water Quality (May 2012)

The following is a list of recommendations made in the May 2012 technical memorandum.

- Construct a clearwell/backwash tank

- Install a control valve at the elevated storage tank or remove elevated storage tank (system hydraulics permitting)
- Addition of in-tank mixers would be beneficial for water turn over
- Construct a new chemical injection vault on the raw water line between the wells and WTP
- As mentioned in the jar testing study, this modification will reduce the amount of potassium permanganate needed for manganese oxidation

2.8.5 Technical Memorandum, Site Visit (November 2012)

The following is a list of recommendations made in the November 2012 technical memorandum.

- Continue to manage backwashes at the lowered DP of 2.5 psi
- Strive to lower the feed pH to 6.8-6.9
- Consider conducting the filter media inspection earlier than planned (scheduled for the upcoming January at the time the memo was written)

2.8.6 Technical Memorandum, Clarifier Alternatives (December 2012)

The following is a list of recommendations made in the December 2012 technical memorandum.

- Construct a DAF clarifier followed by gravity filtration and package adsorption clarifier
- Conduct pilot testing before construction

2.8.7 Pilot Study Protocol (January 2013)

The following is a list of recommendations made in the January 2013 technical memorandum

- Conduct piloting of the DAF/gravity filtration and package adsorption clarifier options investigated in the December 2012 memorandum

3.0 Distribution System Analysis

Using the hydraulic model provided by the Town, AECOM conducted a study of several different distribution storage tank combinations based on the recommendations made in the previous reports/memoranda with the intent of reducing water age in the system. Reducing water age is important in the Georgetown system because it is suspected to cause low chlorine residuals and subsequent odor complaints. As the water spends more time in the distribution system, chlorine residual dissipates, allowing bacteria to survive and produce hydrogen sulfide, which creates a rotten egg odor. AECOM believes that a minimum free chlorine residual of 0.5 mg/L should be maintained at all points in the distribution system. Every simulation was run for a duration of 1000 hours so that any trends would become evident.

3.1 Existing Conditions

Currently, the distribution system utilizes three tanks: one elevated, and two concrete tanks. The elevated tank (Figure 3-1) has a volume of 300,000 gallons and is the primary control for the system. This means that once the elevated tank has filled a signal is sent to the well pumps to shut down. When the elevated tank reaches a preset low level, a signal is sent to the well pumps to start up. Based on data provided by the town, AECOM determined that the elevated tank is allowed to vary in level by approximately 6 feet of its overall 29 foot water depth. The elevated tank operates on a last-in-first-out (LIFO) basis since it only has one fill/drain pipe and no mixing system. This means the most recent water to enter the tank is often the first water to exit the tank.

Figure 3-1: Existing Elevated Storage Tank

Both concrete tanks (Figure 3-2) also operate as LIFO tanks just as the elevated tank does, but these tanks are twice the volume capacity of the elevated tank (600,000 gallons each). Based on the data provided by the Town, the concrete tanks only fluctuate by approximately 1 foot or less. This small fluctuation is due to the fact that the concrete tanks are located further from the WTP than the elevated tank and have four times more combined volume.

Figure 3-2: Existing Concrete Storage Tanks

These factors cause water age to be high, as is demonstrated by the model. As can be seen in Figures 3-3 and 3-4 below, the water age is high in all three tanks. Water age approaches 1000 hours (42 days) in the concrete tanks and approximately 50 hours in the elevated tank (some spikes to 300 hours). These data are consistent with chlorine residual data observed while preparing the May 2012 technical memorandum. The spikes in the graphs can be attributed to the LIFO system of operation because some of the water leaving the tank is very young, while some of the water has been in the tank for a long time. As one may expect, the elevated tank shows the lowest water age most consistently under the existing operating conditions, since it is closest to the WTP and allowed to vary the most.

The water age at nodes with demands throughout the distribution system can be seen in Figure 3-5. As the distance from the storage tanks increases, there is an increase in water age in the distribution system. Nodes without demands (often at dead ends) are not displayed because the model will consistently show that the water age is infinite at those locations. To accurately gauge the water age within the system, the highest age water from the tanks should be added to the output from the model. Under existing conditions, 1000 hours should be added at each location. This means that under existing conditions, the water in the distribution system could have a maximum age of approximately 1408 hours (approximately 60 days).

The lowest pressures experienced in the system under normal conditions are at the highest elevations and near the storage tanks. When varied by only 6 feet of elevation, nearly all the nodes with demand have a pressure close to or over the desired 40 psi.

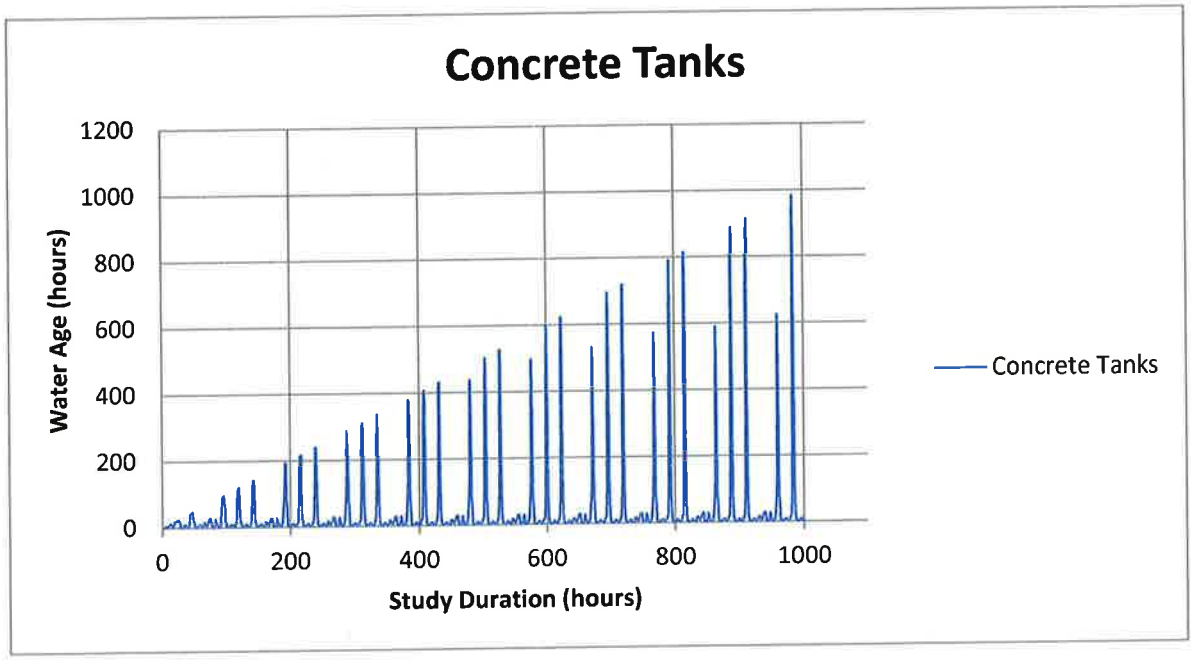

Figure 3-3: Water Age in Concrete Tanks Under Existing Conditions

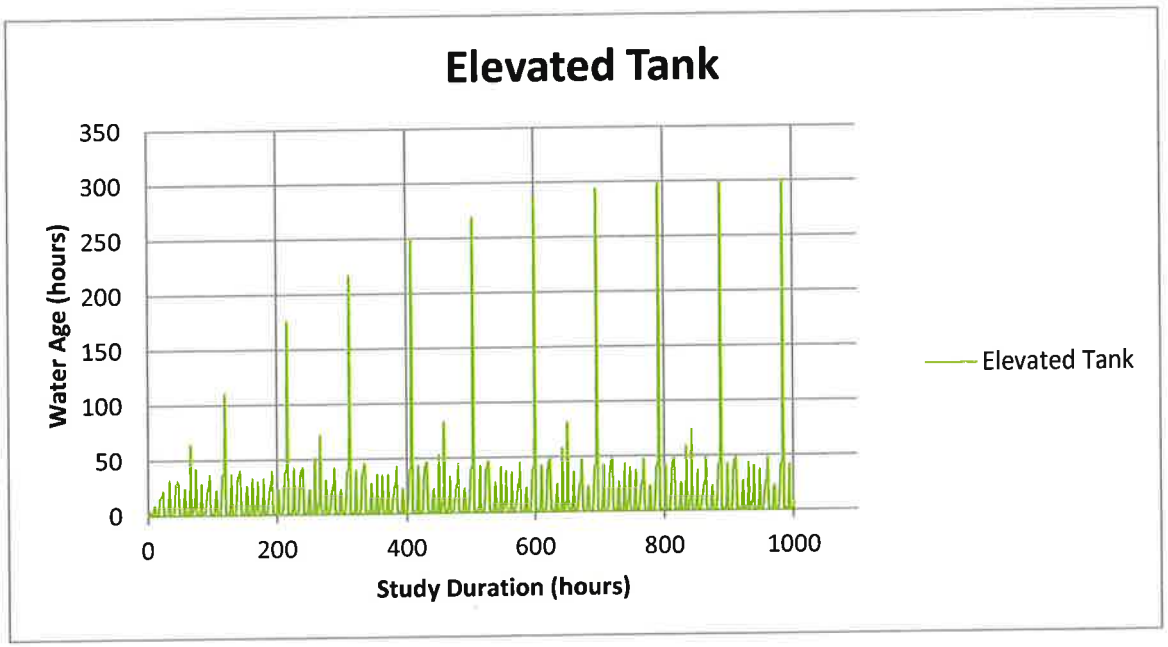

Figure 3-4: Water Age in Elevated Tank Under Existing Conditions

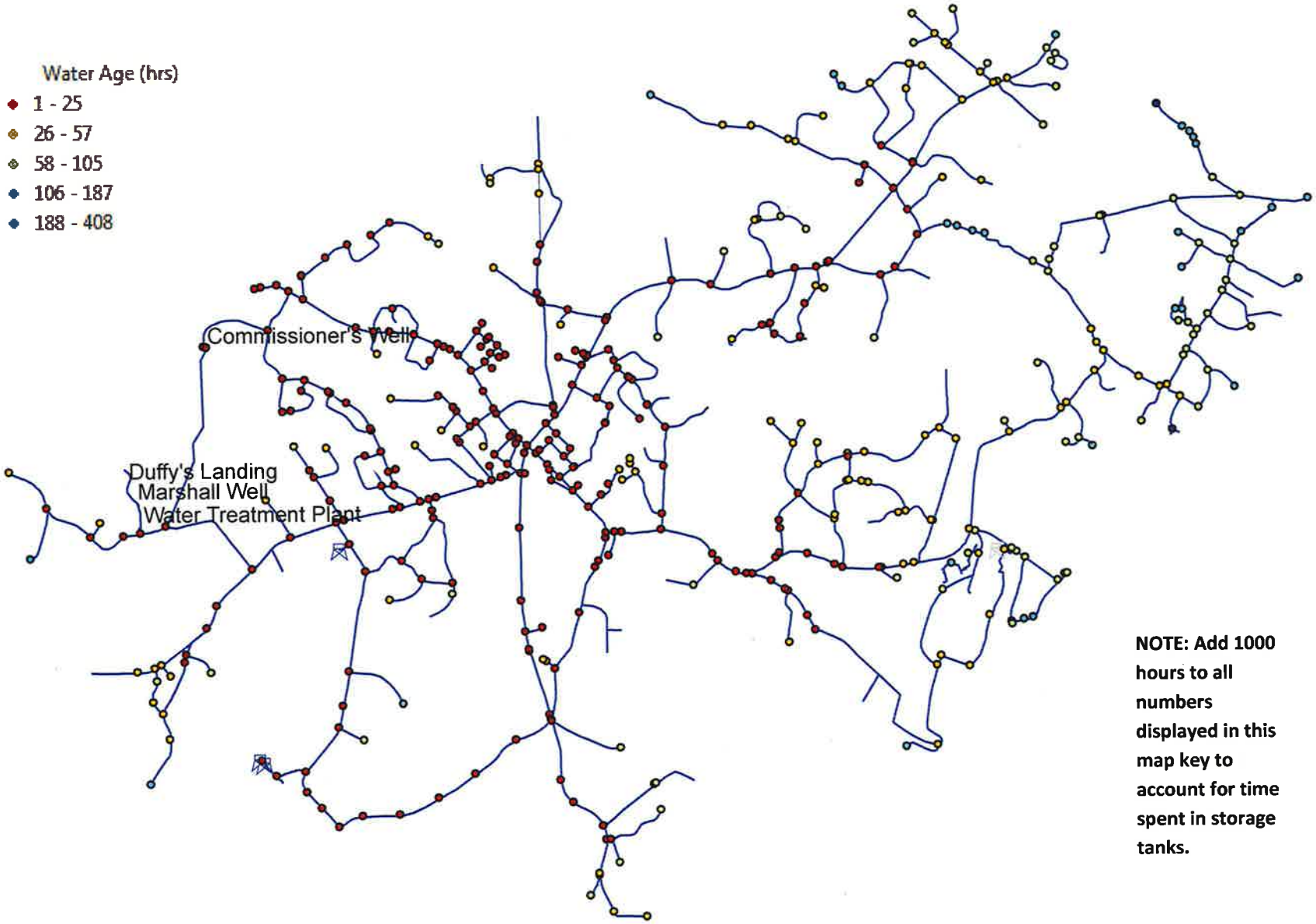

NOTE: Add 1000 hours to all numbers displayed in this map key to account for time spent in storage tanks.

Figure 3-5: Estimated Water Age Throughout System Under Existing Conditions

3.2 Modeled Scenarios

Several scenarios designed to decrease water age were run and compared to the model output from the existing conditions. All of the scenarios modeled allowed for water level to vary by 10 feet in the controlling tank, as opposed to the current six feet. Each new scenario modeled also included the addition of mixers in all of the tanks to increase water turnover rate. These two conditions were applied to all scenarios because of their relatively low cost and anticipated ability to reduce water age. The scenarios and model outputs are further explained below. The scenarios modeled are listed below.

- Scenario No. 1 – Three Tanks, Mixers, 10 Foot Water Level Change
- Scenario No. 2 – Two Tanks (No Elevated Tank), Mixers, 10 Foot Water Level Change
- Scenario No. 3 – Three Tanks (Two Concrete Tanks, One New Tank, No Elevated Tank), Mixers, 10 Foot Water Level Change
- Scenario No. 4 – Two Tanks (Concrete Tank No. 2 and New Tank, No Elevated or Concrete Tanks No. 1), Mixers, 10 Foot Water Level Change

3.2.1 Scenario No. 1 – Three Tanks, Mixers, 10 Foot Water Level Change

In the first scenario modeled, the three existing tanks were modeled again, however they were modeled as completely mixed and the elevated tank was allowed to vary by 10 feet. This simple change predicted decrease in water age within the tanks, dropping the age from upwards of 1000 hours down to approximately 150 hours in both concrete tanks. In the elevated tank, the predicted water age became much more consistent, maintaining an age of about 90 hours. Under existing conditions, model results predicted the elevated tank's water age to fluctuate between less than 50 hours to nearly 300 hours.

After accounting for the oldest water in the tanks as well as the oldest water in the distribution system, the water age was estimated to have decreased by roughly 60% (1408 hours down to 559 hours).

Higher water age is most noticeable at the furthest reaches of the distribution system (eastern side of town).

The nodes with the lowest pressures are at the base of the tanks experience very little change. However, many other nodes along Baldpate Road experience roughly a two psi drop. This is a very small decrease in pressure and would likely go unnoticed by customers.

3.2.2 Scenario No. 2 – Two Tanks (No Elevated Tank), Mixers, 10 Foot Water Level Change

The second scenario modeled examines the effect on the system if the elevated tank was to be removed entirely. As mentioned before, this model was also run allowing water level to vary by 10 feet with completely mixed tanks. Since there is no elevated tank in this scenario, the water level of Concrete Tank No. 2 was set to control the system. The removal of the aging elevated storage tank decreased water age in both concrete tanks to approximately 100 hours maximum. This is a noteworthy improvement from the current water age in the system (roughly 1000 hours in the concrete tanks).

It is also important to note that the removal of the elevated storage tank does not negatively impact the storage volume of the system. According to the December 2010 report, the system will need a build-out storage volume of 1.21 million gallons. The report also projected that the system would require 1.01 million gallons of storage under the projected demands of the year 2030. By removing the elevated storage tank, the system is left with 1.20 million gallons of storage, which is adequate.

Distribution system water age also experiences an overall decrease at the end of the 1000 hour simulation. The maximum water age present (including water age in tanks) is roughly 436 hours (18 days), about a 69% decrease from the maximum age of 1408 hours under the existing conditions.

Under these conditions a larger pressure losses along Baldpate Road and in the area of Long Hill Road are observed. The pressure in decreased in many nodes by roughly three to nine psi, depending on location.

3.2.3 Scenario No. 3 – Three Tanks (Two Concrete Tanks, One New Tank, No Elevated Tank), Mixers, 10 Foot Water Level Change

Building upon Scenario No. 2, a third scenario was modeled in which a new storage tank was added to the system. In this scenario, the elevated tank was removed and both concrete tanks kept in place (Concrete Tank No. 2 still controlled the system). The new tank was added to the east side of the system, between Norino Way and Longview Way. The tank connects to the water main off via a 12 inch pipe on Long Hill Road. Figure 3-6 shows the proposed location of the new tank.

Figure 3-6: Proposed Location of New Tank

This new tank was proposed in the December 2010 report and was originally sized to hold 1 million gallons of water. Considering the projected storage needs of 1.21 million gallons (build out) from the December 2010 report, AECOM chose to downsize the tank to hold 600,000 gallons. This was done by making the diameter 64 feet and the height 25 feet, which is widely regarded as the optimal height for

economic value. With both concrete tanks remaining in the system and the elevated tank removed, this would give the town ample storage (1.8 million gallons). The new tank is below the hydraulic grade line of the system, which means that it fills by gravity. Upon filling completely, a pump station associated with the tank would activate to pump down the tank, while a valve at the tank inlet would simultaneously close. This would prevent pumping the water directly back into the tank.

The addition of a new tank reduces the water age in the Concrete Tanks to a maximum of about 80 hours, an improvement from the existing conditions. The water age in the new tank is higher, reaching a peak of about 130 hours over the 1000 hour simulation time. Water in the distribution system experiences an overall age reduction, going from a maximum of 1408 hours under existing conditions, down to a maximum of about 462 hours. This is about a 67% decrease in the oldest water.

A benefit of a pumped storage tank is the ability to inject chlorine at the tank due to the ability to measure and control the pumped flows. Injecting chlorine at this location should boost residuals on the east side of town.

The addition of the new tank causes pressure losses in the area surrounding it with the existing distribution pipe sizing due to the additional flows to the tank during fill cycles. This issue would be resolved by increasing pipe size leading to the tank.

3.2.4 Scenario No. 4 – Two Tanks (Concrete Tank No. 2 and New Tank, No Elevated or Concrete Tank No. 1), Mixers, 10 Foot Water Level Change

The final scenario modeled was identical to Scenario No. 3, but also removed one of the concrete tanks. This reduced the storage capacity to 1.2 million gallons, which is still about 0.3 million gallons more than the Town currently requires and the appropriate volume to satisfy build out requirements. By removing Concrete Tank No. 1, it was believed that the in-tank water age as well as the distribution system water age would decrease.

Water age in the concrete tank fluctuated from just below 30 hours to just over 35 hours. Water age in the new tank remained consistent between 100 and 110. The maximum age in the distribution system is roughly 430 hours, a decrease from the 1408 hours under current conditions in Georgetown and lower. As with Scenario No. 4, booster pumps may be required at the locations near the new tank.

Much like the previous scenario, considerable pressure loss is experienced near the new tank with the existing distribution system conditions. Distribution system modifications would be required to resolve the low pressure issues.

3.3 Recommendations

When comparing the several scenarios modeled, results show that varying the controlling tank's level by 10 feet and adding mixers to all tanks is beneficial. The water age decreases in both concrete tanks from 1000 hours down to about 150 hours. Water age becomes more consistent in the elevated tank, eliminating the water approaching 300 hours in age. It also decreases the water age in the system from a maximum potential of approximately 1408 hours down to a maximum potential age of about 559 (roughly 60% decrease). By allowing water level to drop ten feet, some hydro-pneumatic tanks may be necessary at homes near in areas where pressure is lowered.

By eliminating the elevated tank, adding mixers, and allowing water level to vary by 10 feet in the controlling tank (Scenario No. 2), water age is decreased to a maximum of about 100 hours in the remaining two concrete tanks. This option also allows for a decrease of maximum water age in the distribution system by roughly 69%. This option also eliminates the costs for the needed repairs to the elevated tank.

AECOM believes that the implementation of a regular, localized flushing plan in the east side of town may help decrease the water age in the far reaches of the system. A tailored plan would need to be developed, but in short, the plan would be to open three or four hydrants for a given amount of time at

a given flow rate on a regular interval. This would pull old water through the system, leading to a lower water age overall. At the flow rates used for regular flushing, the only benefit would be water turn over, which reduces water age. To remove scale or biofilm build up in the pipes, other methods would be necessary.

In summary, the hydraulic modeling has led to the following recommendations.

- Add mixers to both concrete tanks
- Eliminate the elevated tank (initially shut off tank valve to observe pressures and water quality changes)
- Use concrete tanks to control treatment plant and vary their water level by five to ten feet (start at a five foot fluctuation and gradually increase and observe pressures)
- Implement regular flushing plan in eastern section of distribution system

Some of the other storage options (new tank, eliminating older concrete tank) may be recommended after observing the results of the recommendations above.

4.0 Chemical Treatment Alternatives for the Existing Georgetown Water System

As noted, the Georgetown West Street Water Treatment Plant (hereafter referred to as the "WTP") uses greensand filtration to remove iron, manganese, and turbidity from groundwater. This section evaluated the factors that impact finished water quality and develops various chemical treatment alternatives that may improve the quality of the finished water. The following topics are discussed in this section:

- Recommended changes to distribution system pH
- The use of corrosion inhibitors and/or sequesterants
- The impact that sulfate and sulfate reducing bacteria have on the distribution system
- Potential changes to the secondary disinfection practices (i.e., use of chloramines)

A discussion of the existing water treatment process and existing chemical feed system in presented first.

4.1 Existing Chemical Feeds

Figure 4-1 shows the basic treatment process and chemical application points that are currently used. The groundwater pH is adjusted using potassium hydroxide (KOH) applied at the Commissioners and Marshalls Wells. The KOH raises the pH from the low 6's to 6.8-7.0 s.u. After pH adjustment, sodium hypochlorite is added for oxidizing iron and manganese (partially). The application point for the sodium hypochlorite is in close proximity to the filters, and therefore, very little oxidation time is provided (< 1.0 minute) but typically this is adequate for iron oxidation. After the addition of sodium hypochlorite, potassium permanganate is added to provide a continuous manganese dioxide coating on the greensand media, for manganese removal through catalytic filtration. The filtered water is again dosed

with sodium hypochlorite for providing a chlorine residual in the distribution system. The original WTP was equipped with a hydrated lime feed systems to raise the pH and provide stability to the finished water. This was removed due to operational problems associated with the system. Specifically, operators have reported significant deposits of lime and lime impurities in the finished water pipeline near the WTP.

It should be noted that as a groundwater treatment plant, the facility is not required to provide primary disinfection, nor is the use of coagulation required. Should the facility be reclassified someday as a groundwater under direct influence of surface water, both coagulation and primary disinfection will be required for the existing greensand system.

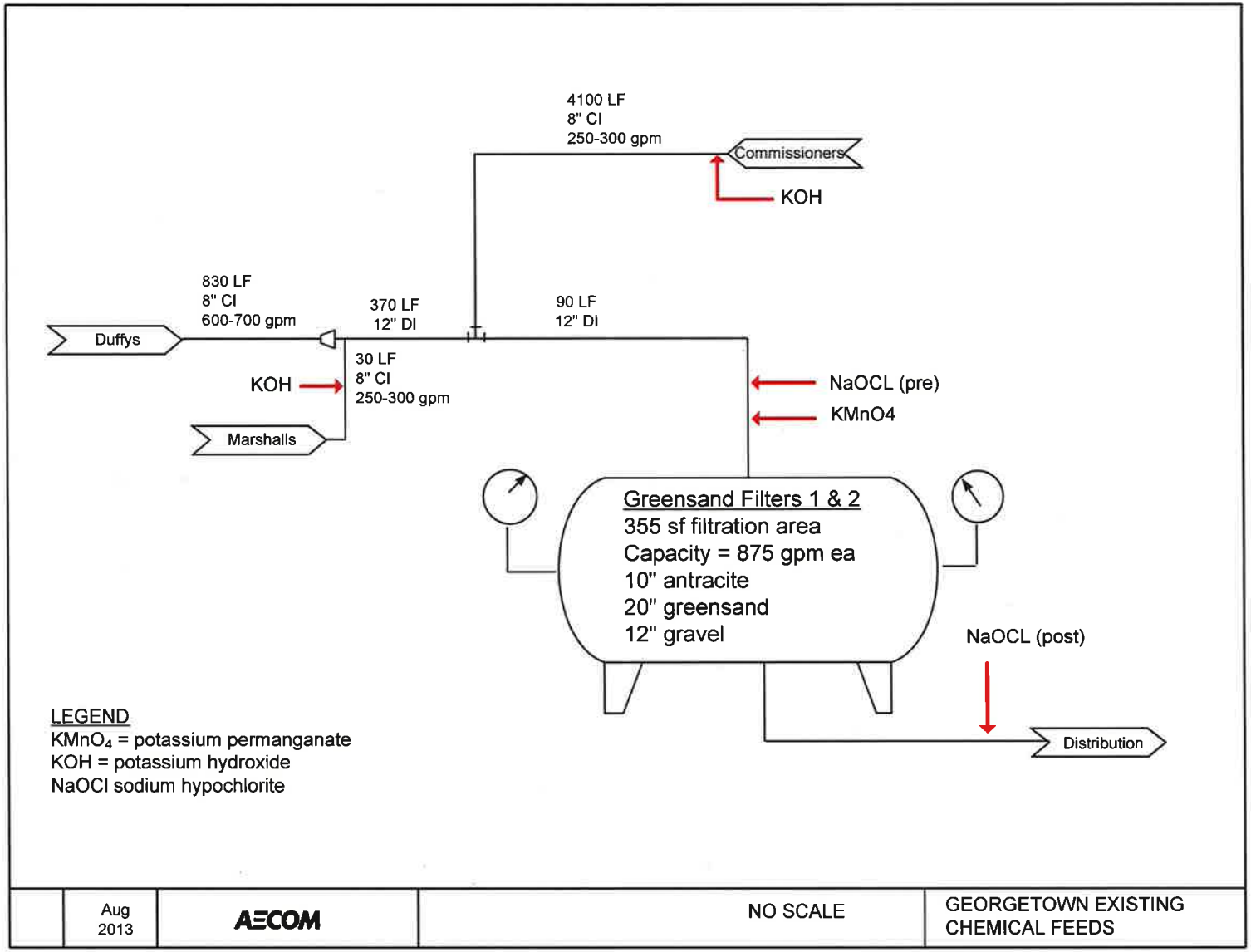

Figure 4-1: Existing Chemical Feeds for the Georgetown MA West Street WTP

4.2 Changes to pH Adjustment Strategy

The adjustment of pH is the most important process parameter at the WTP. The oxidation of iron is pH dependent as is the manganese greensand process. For iron oxidation, because there is very little detention time for the iron oxidation process to occur, a near neutral pH is desirable. A higher pH would favor additional oxidation. However, this would negatively impact the greensand filtration process because the continuous mode of regeneration requires a narrow pH band, between 6.8 s.u. and 7.0 s.u., to be effective. Furthermore, the use of continuous regeneration, as opposed to intermittent regeneration, is advisable where iron removal is the primary objective. Although the well water is high in both iron and manganese, iron is the primary target constituent because this has been climbing since the WTP was placed into service 13 years ago.

Iron concentrations often approach 5 mg/L. According to Hungerford & Terry (a major supplier of greensand media), iron concentrations below about 3 mg/L typically allow for reasonable greensand filter loading rates (less than 5 gpm/sf) and acceptable filter run lengths of 18-36 hours. But with higher iron, filter loading rates must be minimized and filter backwashing becomes more frequent. Both of these conditions impact the economics of operation and have in fact become problematic at the Georgetown WTP. Operation of the filtration process at a pH above 7.0 s.u. can cause the formation of non-filterable iron colloids. In Georgetown, this has in fact occurred in the past, and operators have learned to hold the pH adjustment to below 7.0 s.u. as a rule. This has worked well to remove iron and manganese, and it is not recommended to either switch to intermittent regeneration nor to change the pH through the existing greensand filters.

Yet, another key role of pH is to provide corrosion control in the distribution system. Low pH favors the solubility and corrosivity of metals, including lead, copper, and brass. The presence of lead and copper in home plumbing systems is the focus of the USEPA Lead & Copper Rule (LCR), which sets the lead and

copper levels at 0.015 and 1.3 mg/L, respectively, in 90 % of samples. Compliance with the LCR is generally achieved through pH and alkalinity adjustment, the use of phosphates and other proprietary corrosion inhibitors, or combinations thereof.

There is no universally optimum pH for providing corrosion control; however, the use of the Rothberg-Tamburini-Winsor (RTW) model is widely accepted as a starting point for assessing corrosivity under specific water quality conditions. This model essentially solves the Caldwell-Lawrence diagrams via a spreadsheet approach. The Caldwell Lawrence diagrams were historically used to identify pH and alkalinity conditions where the formation of a calcium carbonate scale would occur, and this scale physically protects piping and services from further corrosion. The RTW model calculates the calcium carbonate saturation potential (CCSP) of the water, where a positive values between 4-10 mg/L is ideal, and then calculates the Langlier Saturation Index (LSI) which measures that saturation pH (with respect to calcium carbonate) versus the actual pH. Conditions that are favorable for corrosion control are CCSP between 4-10 mg/L (too high, will result in excessive scale formation), and LSI slightly positive.

Table 4-1 summarizes the RTW model results for the Georgetown system. Data are based on analytical results of grab samples taken at specific locations within the distribution system, from 2011. As shown, at all of the sites, a relatively low pH results in a negative LSI, and the CCSP is far from scale formation. Based on these results, this water is considered aggressive and corrosive. In addition, the chloride to sulfate mass ratio (CSMR) was calculated to be in the range of 1-2.5, which is considered favorable for galvanic corrosion of lead leaching from lead solder and copper pipes. Research has shown that the CSMR > 0.5 resulted in increase in galvanic corrosion (Edwards, et. al, Journal AWWA, July 2007). This supports earlier research which has shown that sulfate plays a major role in the formation of protective scales and is crucial in overcoming the negative effects of chlorides. Orthophosphate and zinc

orthophosphate has been shown to be effective in reducing lead leaching mitigating the effects of high CSMR.

Despite the results of the modeling and the low pH, the Georgetown Water Department has been in compliance with the LCR which requires lead levels in 90 % of samples to be at or below the limit of 0.015 mg/L. However, there are locations that show elevated levels of lead. For example, the 2012 Water Quality report shows a value for lead at 0.039 mg/L (above the 0.015 mg/l standard) in the kitchen of the Georgetown Middle School. In the 2011 Report, this same location showed a concentration of 0.016 mg/L. At the Penn Brook Elementary school, a level of 0.014 mg/L was detected which nearly exceeds the MCL. Higher lead and copper values are often associated with locations that see intermittent flows, such as water fountains at municipal buildings and schools. Nonetheless, these data would suggest that an improvement in corrosion control would be beneficial. This can be facilitated by pH adjustment of the finished water, following filtration, at a minimum.

Table 4-1: Summary of RTW Model Outputs for Georgetown Distribution System (2011)

	32 Pilsbury Ln	269 Central St	Penn Brook School	WTP Finished	Water office	423 W.Main St	Raymond Court	12 Prescott Ln
Jan 5 2011								
pH	7.2							
Alkalinity (mg/L CaCO3)	76							
Sulfate (mg/l)	39							
LSI	-1.30							
Chloride/Sulfate Ratio	0.99							
CCCP	-21.20							
DIC (mg C/L)	20.99							
May 17 2011								
pH		6.9	6.9	6.8	6.8			
Alkalinity (mg/L CaCO3)		80	72	80	83			
Sulfate (mg/l)		32.6	64.2	26.7	29.7			
LSI		-1.63	-1.66	-1.73	-1.71			
Chloride/Sulfate Ratio		1.02	0.38	1.09	1.15			
CCCP		-42.81	-39.36	-52.98	-54.41			
DIC (mg C/L)		25.02	22.52	26.55	27.54			
July 30 2011								
pH						6.7	6.7	
Alkalinity (mg/L CaCO3)						78	83	
Sulfate (mg/l)						17.2	17.3	
LSI						-1.85	-1.85	
Chloride/Sulfate Ratio						1.74	1.78	
CCCP						-64.02	-67.27	
DIC (mg C/L)						27.71	29.50	
October 19 2011								
pH								7.1
Alkalinity (mg/L CaCO3)								88
Sulfate (mg/l)								12.5
LSI								-1.40
Chloride/Sulfate Ratio								2.84
CCCP								-29.89
DIC (mg C/L)								25.16
Dec 9 2011								
pH				6.8				
Alkalinity (mg/L CaCO3)				88				
Sulfate (mg/l)				14.8				
LSI				-1.74				
Chloride/Sulfate Ratio				2.58				
CCCP				-52.48				
DIC (mg C/L)				26.21				

The following recommendations are provided with respect to pH adjustment:

- Provide the ability to raise the pH of the finished water. The use of KOH or NaOH are recommended options over the use of hydrated lime. It may be possible to use the same post-treatment chemical feed point that was used for lime feeding.

- As a starting point, the target finished water pH should be in the low to mid 7's (i.e., 7.3-7.6 s.u) for limiting corrosivity.

- Should the Georgetown WTP eventually utilize chloramines for secondary disinfection (see Section 4.5), the pH may need to be adjusted slightly upwards again, to maximize the efficacy of monochloramine. However, the use of chloramines is a longer term recommendation that should not preclude the short term finished water pH adjustment for minimizing corrosivity.

- Changes to the finished water should be introduced slowly, over the course of 3-6 months and should be initiated after a distribution system flushing program is exercised.

4.3 Corrosion Inhibitors and Sequesterants

The use of corrosion inhibitors (in addition to pH adjustment) are commonplace for controlling lead and copper corrosion and for improving distribution system water quality and sequesterants are used to prevent dissolved metals from oxidizing within the distribution systems.

In Georgetown, the use of a corrosion inhibitor could be coupled with pH adjustment to help maintain more reliable compliance with the LCR. Corrosion inhibitors essentially work by forming a protective film or scale over the pipe wall surface, protecting the pipe from corrosion. There are a large number of proprietary and non-proprietary corrosion inhibitors and sequestering agents on the market, most commonly; orthophosphates, polyphosphates, proprietary blended phosphates, and silicates. Phosphate scales have been shown to be highly effective in protecting pipe surfaces from corrosion.

Orthophosphates have been shown to reduce corrosion of iron, with the ability to harden existing iron scales. Polyphosphates and proprietary blends of phosphates have also been shown to be effective in reducing red water complaints and lead corrosion. However, there is some evidence that shows that phosphates have not reduced black water events and can actually promote sulfate reducing bacteria (SRB) because phosphate is a necessary nutrient. Therefore, the use of a phosphate based corrosion inhibitor may aggravate the problems associated with SRB (discussed in Section 4.4 below). Silicates, in the form of sodium silicates, have been shown to be effective particularly for iron corrosion by the formation of a protective film, and also offer the secondary benefit of raising the pH because sodium silicates are basic. There is debate with silicates whether the protective film is the primary mechanism of corrosion control, or the higher pH. This is an important question, because silicate doses tend to be much higher compared to doses of phosphates, for example, 1-4 mg/l for phosphate based inhibitors versus 10-20 mg/l for silicates.

Sequeseterants are formulated to prevent dissolved iron and/or manganese from oxidizing within the distribution system. Sequestration (or chelation) can be defined as the ability of a chemical to form a complex bond with metal ions that allows these metal ions to remain in solution despite the presence of precipitation agents (i.e., chlorine). Sequesterants are often polyphosphate based and can be very helpful particularly in small groundwater systems that are not equipped with treatment systems for iron and manganese removal.

AECOM has contacted Harcros Chemical, a major distributer of corrosion inhibitors and sequesterants, to discuss the problems that are found in the Georgetown distribution system, which center on lack of chlorine residual, presence of existing iron scale, sulfate reducing bacteria (see Section 4.4 below), complaints of staining and odors at customer taps. In addition to raising the pH to approximately 7.5 s.u., Harcros has commented that the use of an inhibitor could help to provide corrosion control and

improve water quality, but much more analysis, and pending the results of the pH adjustment would be required to select a trial inhibitor. The Massachusetts Department of Environmental Protection (MADEP) would require a demonstration study to test the efficacy of the use of an inhibitor. At a minimum, this study would consist of a monitoring program, followed by lead & copper sampling.

In summary, the use of corrosion inhibitors and/or sequesterants may offer a means of improving distribution system water quality, but Georgetown should first implement the post-treatment pH adjustment change, and then allow the distribution system to adapt to this new pH. After the system has stabilized, and other changes regarding water age are implemented, a more informed review of the corrosion control options can be made.

4.4 Impact of Sulfate on Distribution System

Sulfate (SO_4) can be found in almost all natural water. The origin of most sulfate compounds is the oxidation of sulfite ores, the presence of shales, or the industrial wastes. Sulfate is one of the major dissolved components of rain. High concentrations of sulfate in drinking water (> 250 mg/L) can have a laxative effect when combined with calcium and magnesium, the two most common constituents of hardness.

The maximum level of sulfate suggested by the World Health Organization (WHO) in the Guidelines for Drinking-water Quality, set up in Geneva, 1993, is 500 mg/L. Both the USEPA and EU standards are more stringent, suggesting a maximum of 250 mg/L of sulfate in water intended for human consumption.

The wells that supply the Georgetown WTP contain variable levels of sulfates. The Commissioners Well historically contains the higher levels with values between 20-90 mg/L. Duffy's well and Marshalls well

contain sulfates in the range of 5-40 mg/L. The blended water to the WTP typically contains sulfates that can range from 20-60 mg/L, depending on the contributions of water from the various wells.

These values are not considered unusually high. Cross-references from other groundwater and surface water treatment plants in New England, and review of the available literature generally refer to sulfate from 60 -100 mg/L as "relatively high." It is noted that many utilities use aluminum sulfate for coagulation, and we have determined that sulfate levels between about 20-100 mg/L are not uncommon. According to a World Health Organization (WHO) report (*Sulfate in Drinking Water, 2004*), the sulfate levels in drinking water can be highly variable as impacted by geology and treatment practices. For example, the WHO report states that the mean sulfate levels in drinking water in Ontario are about 23 mg/L but can range from 98 mg/L to 368 mg/L in Saskatchewan. British tap water was reported to have a mean sulfate concentration of 60 mg/L with a maximum of 236 mg/L.

In the US, the secondary standard for sulfate is 250 mg/L. As noted above, high sulfate concentrations have been shown to promote a laxative effect, but otherwise there are no major health problems associated with sulfate.

Sulfates can, however, be utilized by sulfate reducing bacteria (SRB) to form hydrogen sulfide, which is corrosive and is responsible for consumer complaints of odors in tap water. This problem is prevalent in

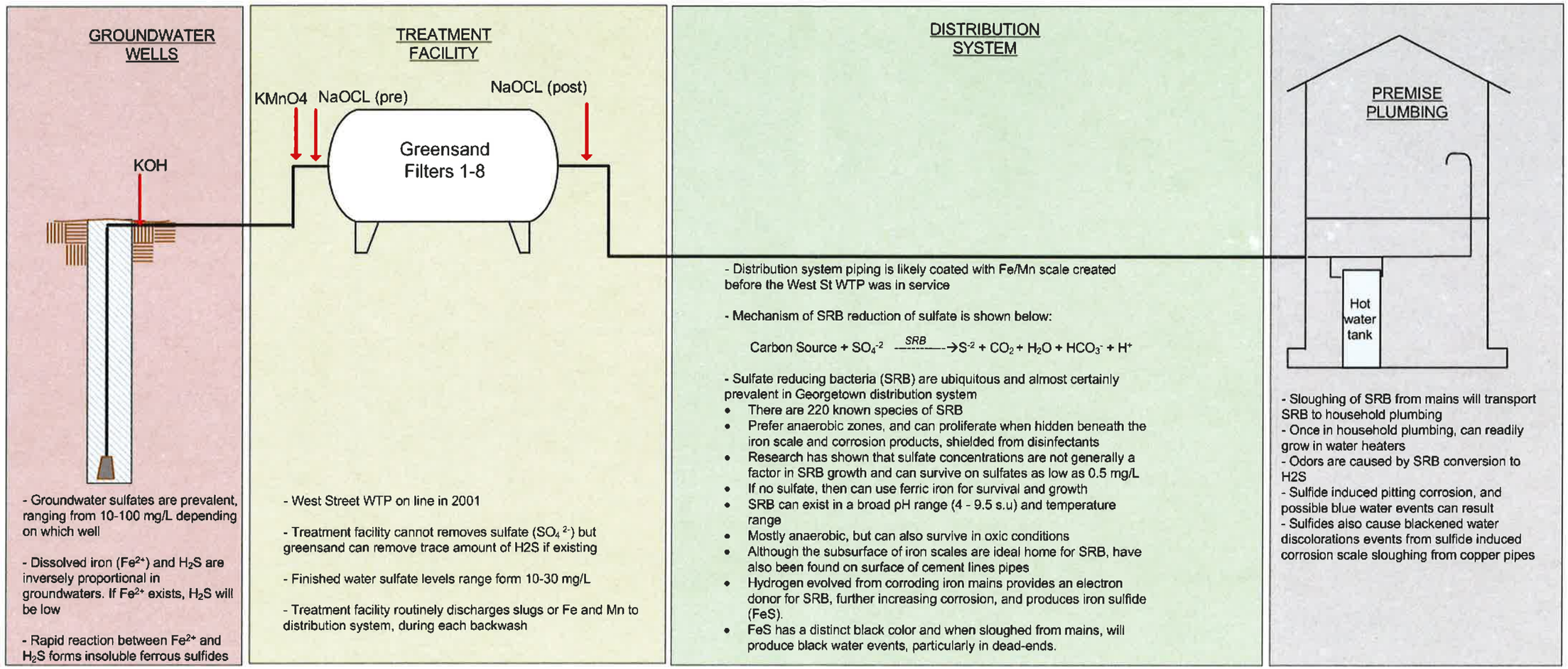

Figure 4-2: Impact of Sulfates on Groundwater Systems

the Georgetown distribution system and the impact that sulfates have on the water system as a whole are significant, as illustrated in Figure 4-2. Recently, it was reported that the operators in Georgetown took the Commissioners Well offline, which historically contains the higher sulfate levels, and this coincided with a reduced number of complaints. In short, sulfates themselves are not problematic but they provide a mechanism by which sulfate reducing bacteria (SRB) can survive. In a study of two water distribution systems, one from surface water (Utility 1) and the other from Groundwater (Utility 2), SRB were positively identified in the iron scales that had built up on the inside of the distribution systems (Lytle et. al., Journal AWWA, October 2005). Despite the fact that the both source waters contained approximately the same sulfate concentrations (13-114 mg/L), only Utility 2, the groundwater system, reported significant complaints of odor and discoloration, as well as very low chlorine residual. The researchers showed that the iron scales in the groundwater distribution system did not contain magnetite (Fe_3O_4), which was found in the Utility 1 distribution systems and is important in protecting iron pipes from iron release and subsequent discolored water from binding with sulfur bearing corrosion products. The absence of magnetite and chlorine residual in Utility 2 was attributed to a much more favorable environment for SRB growth. This shows the importance of a maintaining a chlorine residual, especially in the far reaches of the distribution system. The presence or absence of a magnetite scale in the Georgetown system is unknown. Sample sections the distribution system piping would need to be collected to investigate this. However, the absence of a chlorine residual is well documented in Georgetown.

Removal of sulfates can be achieved by ion exchange, reverse osmosis, or distillation. However, research has shown that once established, the SRB can survive on very low levels of sulfate (< 0.5 mg/L) or if sulfates are not available, SRB can utilize iron for growth. Therefore, removing sulfates from the source water is not a practical or economical option. Further, comparing finished water sulfates to distribution system sulfates, with the expectation of finding lower levels in the distribution system, does

not prove or disprove the existence of these bacteria. However, in a recently published research report entitled "*Experiments to Establish Sulfate Reducing Bacteria on Premise Plumbing* (Water Research Foundation, 2012), hereafter referred to as the WRF Report, the authors stress that SRB are found in many potable water systems and are responsible for extensive problems including sulfide corrosion of iron and copper, odors resulting from production of hydrogen sulfide (H_2S), and discoloration from sulfide bearing corrosion by-products.

SRB prefer anaerobic conditions, which are ideally provided by iron scales and corrosion products. These scales shield the SRB from disinfectants, allowing for proliferation. SRB are then occasionally sloughed off from the mains, and transported to premise plumbing (customer's homes). Here, the SRB can flourish again, causing sulfide induced copper corrosion blackwater staining, and odors particularly from the hot water side of a hot water tank.

In some cases, hydrogen sulfide will occur only in the hot water as a result of a chemical reaction in the water heater itself. Most water heaters contain a corrosion protection device known as a "sacrificial anode." When dissolved sulfate compounds come in contact with the anode, the resulting chemical reaction converts the sulfates into hydrogen sulfide. This has been documented in Georgetown.

Table 4-2 lists a summary of the water quality complaints. It is very likely that many of these are related to the presence of SRB and the associated corrosion products. Also, it is reported that the majority of the complaints are in the farther reaches of the system east of the water plant and primary near to or east of Interstate 95, where water age is highest and residuals chlorine is lowest.

Although the sampling to date has been unable to confirm their presence, SRB are very likely contributing to the problems in the distribution system due to odors reported by residents and during hydrant flushing. According to the 2012 WRF Report, sulfide odor detection is a reliable presence/absence test for sulfide, because sulfides are detectable at very low levels. SRB tend to grow

deep within biofilms (slime) and are thus difficult to detect. The presence of iron related bacteria (IRB) is also possible. Complexes of iron create iron sulfides which result in black sediment and staining, which is a reported problem in Georgetown Iron oxidizing bacteria can be slime forming as well, and can shield sulfur reducing bacteria. Once these bacteria and other slime-forming bacteria become established, they become resistant to the normal levels of chlorine. Before the WTP was constructed, high concentrations of iron were common in the distribution system. It is possible that an iron related biofilm was created when no iron removal mechanism was present, and this slime is now able to shield SRB in an anaerobic layer between the iron biofilm and pipe wall.

Table 4-2: Summary of Tap Water Quality Issues

Issue	Description
Several customers report H_2S odors, especially in their hot water	SRB flourish on the hot water side of residential hot water tanks. SRB convert sulfate to H_2S (hydrogen sulfide).
Several hot water heater anode rods have been corroded, and there is sediment forming in the hot water heaters. Where hot water tank aluminum heating elements rods have corroded, magnesium rods have been installed	Magnesium anode which are installed to prevent corrosion of the hot water tank, serve as an electron source for converting sulfate to H_2S gas, promoting corrosion.
Laundry staining (reddish yellow color) and hot water staining is occurring throughout the distribution system	Probably the result of blackwater created by sulfide bearing corrosion products and/or particulate iron and manganese
New streets and new developments seem to have most of the problems	Newer services do not have the protective coating (scale) on the pipe wall as would occur on older services. Also, newer neighborhoods are in the further reaches of the system where water age is highest (and thus chlorine residual is lowest)
There are usually less odor complaints in the winter	Cold water inhibits bacterial activity and also promotes a longer lasting chlorine residual
The chlorine residual diminishes quickly after the water leaves the WTP. Many area of the water system have low or no Cl_2 residual. In the pipeline between the plant and the finished water sample tap, chlorine decay has been observed to occur even during off-cycle operating periods (8 hrs). The breakdown of total chlorine is the combined chlorine is roughly 2 times the free chlorine measured.	Presence of SRB, iron related bacteria (IRB), and periodic Fe & Mn loads to the distribution system, coupled with high water age issues, all work to create a situation where maintaining a chlorine residual is difficult.
No sulfate reducing bacteria were found in the bulk water in limited testing	SRB are difficult to isolate, and can be "mobile" within the distribution system.

Removal of SRB from household plumbing is very difficult, and most attempts involve chlorination, increasing the water temperature, switching anodes, and flushing. These are temporary fixes at best.

Distribution system water quality problems can be minimized through better control of finished water iron and manganese. It is not recommend, however, to attempt to remove sulfates from the well water. This is impractical because sulfate removal cannot be achieved concurrently with iron and manganese removal without sophisticated processes such as ion exchange or reverse osmosis. Also, SRB can survive with very little sulfate supply, meaning that complete sulfate removal would be required. Rather, it is more feasible to address SRB and IRB in the distribution system through improved chlorine residual and then possibly coupled with a combined corrosion control and sequestering agent.

Conclusions regarding potential treatment system changes in response to sulfates, SRB, and H_2S are as follows:

- It is impractical to attempt complete removal of sulfates from the source water
- In the pH range 7-9, typical of most distribution systems, HS- is the dominant form of reduced sulfur. According to the 2012 WRF Report, there is no evidence to suggest that there exists a higher pH that is unfavorable to SRB survival.
- Isolating sections of the distribution system for focused cleaning, or superchlorination, followed by unidirectional flushing should be considered for reducing the presence of SRB in the distribution system.

4.5 Chloramination

The use of chloramines should be considered as a final step in improving distribution system water quality.

Chloramines are formed by the addition of ammonia to finished water carrying a free chlorine residual. Chloramines are used in many public water systems, and have been in use since the 1930's, most typically for secondary disinfection rather than primary disinfection. The reason for this is that

chloramines are a rather weak disinfectant, which means that contact time needed to inactivate pathogens is excessive. However, they are much more stable and longer lasting than free chlorine, and for this reason they have the ability to control and penetrate biofilms. For example, LeChevallier and Beer (Journal AWWA 1993) showed that free chlorine reacts very quickly at the surface of a biofilm but is consumed before it gets a chance to react with the bacterial components that lie beneath the surface. Chloramines are slower to react and can therefore reach the biofilm and eventually inactivate attached bacteria. Chloramines would also persist in the far reaches of the Georgetown distribution system where free chlorine is presently difficult to maintain. Thus, the water age issue can be partially mitigated by the use of chloramines.

There are options for ammonia feed, including aqueous ammonia, gaseous ammonia, dry ammonium sulfate, or pre-mixed liquid ammonium sulfate (LAS). In New England, LAS is provided by General Chemical but at present there are no other providers. A dry ammonium sulfate system would be recommended for making LAS rather than purchasing the proprietary pre-mixed blend. This would consist of a batch make-up tank, a day tank to contain the LAS solution, a metering pump to dose the ammonia to the finished water, and associated controls, scales, and metering equipment.

In addition to providing for a more stable residual and being more able to penetrate biofilms, another main advantage with the use of chloramines is that they are less reactive with organic matter compared to free chlorine, and thus create far lower disinfection by-products. A review of the Georgetown total tri-halomethane (TTHM) levels shows that values can approach the 80 ug/L limit. The 2012 sample taken at the Erie Fire Station resulted in a concentration of 77.6 ug/L.

There are disadvantages with the use of chloramines, however. In recent years, there has been some public rejection of chloramines due to issues with skin rashes and respiratory problems in isolated cases. The use of chloramines can also lead to nitrification in the distribution system. Nitrification can lower

the alkalinity and pH of the water in the distribution system and lead to increased corrosion and metal release; especially for lead and copper pipes and appurtenances. This may also lead to violations under the Total Coliform Rule (TCR). In addition, there have been documented taste and odor issues associated with the use of chloramines, compatibility issues for dialysis patients, fish owners, industrial customers, and others with compromised immune systems, (USEPA, 2007). When using chloramines, it is essentially to carefully monitor and control the ammonia to chlorine ratio to minimize nitrification. Many systems that are on chloramines will institute an annual "chlorine burn", a short term conversion back to free chlorine for the purposes of controlling biofilms and nitrifying bacteria.

4.6 Summary of Recommendations for Changes to Chemical Treatment

In general, there is probably no single solution that will resolve all customer complaints, but rather a number of measures collectively will be required to restore distribution system quality. Recommendations regarding changes to chemical applications are as follows:

1) A post pH adjustment point should also be added, and the GWD should consider raising the finished water pH, slowly over a 3 month period, to approximately 7.5 s.u., to reduce the corrosivity of the finished water.

   The literature does not provide information regarding the optimal pH for SRB or sulfate/sulfide control. One study did show that sulfides were less destructive at a pH of 9 than they were at a pH of 6.0 (Jacobs, Journal AWWA, July 1998). However, this severe pH increase is not practical and not recommended for Georgetown due to the impact on chlorine efficacy.

2) In a jar resting study performed by AECOM (March 2012), the option to add pre-chlorine to a point further ahead of the greensand filters at the treatment plant has been shown to maximize iron oxidation and should be considered for the full-scale. Alternatively, if the

formation of haloacetic acids (HAA's), a regulated disinfection by-product, continues to be a problem for Georgetown, the use of potassium permanganate can replace chlorine as a pre-oxidant.

3) A uni-directional flushing program should be developed and then implemented, and this can be coupled (in select geographical areas) with superchlorination to reduce SRB. AECOM has performed a unidirectional flushing program and superchlorination program elsewhere with good results.

4) After pH adjustment has been implemented, and after the flushing program and other hydraulics changes to the distribution system have been implemented (as a means of reducing water age), the use of corrosion inhibitors and/or sequesterants can be considered. By this time, the impact of a higher finished water pH (alone) and reduced water age will be known and the selection of the optimal inhibitor will be better informed.

5) Sulfate reducing bacteria, and possibly iron reducing bacteria are likely prevalent in the distribution system, possibly deposited and active prior to the construction of the new water treatment plant. It is common for these bacteria to flourish in the anaerobic layer beneath iron scales and/or biofilms, and in these protective environments, are shielded from the effectiveness of disinfectants. The conversion from free chlorine to chloramines should be considered for use as a secondary disinfectant for longer lasting residual and biofilm control.

6) Inability to maintain a chlorine residual due to water age, iron, manganese, and TOC in the finished water is advantageous for the proliferation of SRB and other bacterial activity, even if chloramines are used. Therefore, maintaining water quality from the treatment

plant should be continually observed, with some consideration for future TOC removal capabilities.

7) Remove of SRB from household plumbing is difficult, and can require a combination of chlorination, flushing, elevated hot water temperature, and anode replacements. This may need to be repeated.

5.0 Available Funding Sources

This section provides a description of potential funding sources that may be available to Georgetown for some of the projects described in this report. The funding sources described include:

- Massachusetts Drinking Water State Revolving Loan Fund (DWSRF)
- USDA Rural Development
- Legislation Currently being Drafted by the Massachusetts Legislature
- Local Borrowing
- Water and Wastewater Rate Relief

Key components of the potential funding sources are provided below:

5.1 Massachusetts Drinking Water State Revolving Loan Fund (SRF)

The DWSRF Program's goals are to protect public health and strengthen compliance with drinking water requirements, while addressing the Commonwealth's drinking water needs. The DWSRF Program is jointly administered by the Division of Municipal Services of MassDEP and the Massachusetts Water Pollution Abatement Trust (Trust). The program's subsidy is provided via a loan with an interest rate typically near 2 percent and payback period of 20 years.

Financial assistance is available for engineering, design, and construction of drinking water projects, including new and upgraded drinking water treatment facilities that protect public health and strengthen compliance with federal and state drinking water regulations. The need for drinking water funding in the Massachusetts exceeds the financing available under the DWSRF. Therefore, MassDEP has established criteria to evaluate and prioritize proposed projects.

To be considered for funding, a public water supplier must complete a project evaluation form (PEF) during the project solicitation period in May of each year. The application requires information showing that the project: 1) benefits to public health or drinking water quality, 2) has local funding authorization, and 3) has a commitment that the borrower can file a timely loan application. MassDEP ranks the projects using a system which assigns points on the basis of criteria that includes the amount that the project:

- eliminates or mitigates a public health risk;
- is necessary to achieve or maintain compliance with applicable drinking water quality requirements;
- is affordable to users in the service area;
- consolidates or restructures a public water system;
- implements, or is consistent with, watershed management plans (or addresses a watershed priority) and is consistent with local and regional growth or infrastructure plans; and
- borrower supports the Commonwealth Sustainable Development Initiative, as evidenced by its Commonwealth Capital Score.

After evaluating the PEFs submitted in response to the annual solicitation, MassDEP ranks the projects, conducts a public hearing, and adopts a priority list of projects eligible to receive financial assistance. From this annual priority list, and on the basis of the projects' readiness to proceed, MassDEP assigns projects to the Intended Use Plan Project Listing (IUP). The IUP is a subset of the annual priority list and identifies candidates for DWSRF funding.

Projects on the IUP are eligible to apply for financing during the current year. To qualify for placement on the DWSRF IUP, a project must have a high enough ranking, and have received a local funding appropriation or be scheduled for funding appropriation by June 30th of the calendar year. Also, the

applicant must be able to file a complete loan application no later than October 15th of the calendar year and obtain a Project Approval Certificate (PAC) from MassDEP. The loan application must include information about funding authorization, repayment ability, and project schedule. A complete loan application also includes construction contract documents ready for bidding and evidence of compliance with applicable environmental reviews and permits.

5.2 USDA Rural Development

USDA Rural Development administers a drinking water loan and grant program with the goal of improving the quality of life and promoting economic development in rural areas of the U.S. "Rural" is defined by USDA as communities having a population of less than 10,000. Georgetown's population meets USDA RD requirements for eligibility of a loan, but the median household income of Georgetown exceeds the requirements to receive a grant. The program's current interest rate is approximately 3.5% and the loans have a pay-back period of up to 40 years. The pay-back period is based on the expected useable service life of the project. Therefore, a treatment plant project may have a pay-back period of 30 years where as a water storage tank or water main project may have a pay-back period of 40 years.

To be considered for a loan, a public water supplier must complete a USDA loan application. The loan application is quite lengthy and must be accompanied by several documents including:

- A description of the applicant's organization
- Financial statements
- A current and anticipated water rate schedule
- A proposed engineering agreement form
- A preliminary engineering report
- A system description worksheet
- An environmental report

- Letter from a historic preservation officer

Loan funds may be used for reasonable fees and costs such as: legal, engineering, administrative services, fiscal advisory, environmental analysis, and surveys.

5.3 Legislation Currently being Drafted by the Massachusetts Legislature

There is currently significant legislation being drafted in both the Massachusetts House and Senate (SB 1880) which is aimed at assisting communities with water and wastewater infrastructure repairs and improvements. If this legislation passes, the funding assistance will be administered through the Massachusetts Water Abatement Trust (Trust). The Trust is the same agency that currently administers the SRF program that is described above. Therefore, the new program may become a part of an expanded SRF program that will include: additional funding (from the current $88M to $138M, lower interest rates (from the current 2% to 0%), and longer payback terms (from the current 20 years to 25 or 30 years).

Along with the financial improvements, the legislation will require management reforms and improved system performance. Municipalities will be required to use best management practices for asset management and operate under an enterprise account. Municipalities will also need to establish a leak detection program and classify the severity of the leaks when they are found.

One of the major sponsors of the legislation is Senator Bruce Tarr, who is Georgetown's Senator. We recommend that the Board of Water Commissioners begin contacting Senator Tarr's office to inform them about all of the improvements that the Georgetown Water department must undertake.

5.4 Local Borrowing

Towns wishing to borrow money for extended periods of time through local borrowing must issue bonds to investors. The bonds are repaid typically within 10 to 30 years with interest. State laws regulate the

purposes for which towns may borrow, and how long such loans may last. (See M.G.L. Ch. 44, Secs. 7 & 8.) Towns that borrow long-term must plan such indebtedness so they do not overextend themselves, yet can still provide required capital improvements. Communities facing fiscal constraints may raise funds for certain capital purposes above the amount of their levy limit or levy ceiling through a debt or capital outlay expenditure exclusion. (See Section 2.2 of this Guide for detailed discussion on levies, Proposition 2 1/2 and long term debt.) Long-term debt is usually sold with the assistance of bond counsel and a financial advisor. It involves the preparation of a disclosure document, an application for a credit rating and, usually, a formal sealed competitive bidding process. However, for smaller amounts, a town may also explore selling State House serial notes, which involves issuing debt certified by Department of Revenue (DOR's) Bureau of Accounts rather than a bank. State House notes are usually easier to issue than long term bonds and typically have lower issuance costs. The key to proper debt management is to carefully identify the town's capital needs and establish a prudent financing plan that repays the loans over the useful life of the capital improvement. In order to successfully manage debt, towns should create a capital improvement plan that spans at least five or six years at a time. Capital improvement plans must be updated continually to remain accurate and useful.

5.5 Water and Wastewater Rate Relief

Approximately 15 years ago, the Massachusetts Legislator appropriated $50 million to assist regional authorities and municipalities with payment of interest costs related to capital water and wastewater improvements. The goal of the legislation was to reduce water and sewer rates that were being impacted by high interest costs. The legislator has never re-appropriated additional funds into the program, and it has now been almost completely depleted. The legislature from time to time has considered funding a rate relief program that would help communities with debt service. Current legislation does not include any appropriations for debt service relief. However, an amendment may be

attached to pending legislation in the near future, which would allocate funds for this purpose. This program is not currently a realistic source of rate relief for Georgetown.

5.6 Capital Funding Recommendations

At the time when Georgetown selects the capital improvements that will be undertaken, and develops an implementation schedule, we recommend that the funding sources above are evaluated to determine which source or combination of sources will provide the highest value. Some options may provide a higher interest rate and longer payback period, while others may provide a lower interest rate and a shorter payback period. Each funding option can impact both the Towns debt and water rates in a different way. The Town will need to select the funding option or combination of options that best meets its needs. We also recommend that the Town keep in contact with Senator Bruce Tarr's office to keep them informed of planned capital improvements and request that they advocate for the Town when requesting State funding.

6.0 Recommended Water System Improvements

This section includes a summary of our recommendations for improving the Georgetown's finished water quality along with estimated cost ranges for each recommendation. These recommendations are based on the information and recommendations provided in the previous sections of this report. We have classified our recommendations as either short term, medium term, or long term. The classifications are based on 1) the cost of the improvement, 2) the time it would require to complete the improvement, and 3) the anticipated impact of the improvement. Generally, the recommended short term improvements have lower cost, can be performed in a relatively short period of time, and are expected to have a noticeable impact on improving water quality. The cost and time to complete the improvements are generally higher for the other classifications and the expected impact on water quality may be similar to the recommended short term improvements. The shorter term improvements should be completed first and the impacts of the improvements evaluated prior to beginning to execute the longer term improvements. In some cases, the shorter term improvements may satisfactorily improve the water quality so that the longer term recommendations will not be necessary. To monitor the effects of improvements made, samples will be taken throughout the distribution system at points that have been previously used for sampling.

It is important to note that the costs provided are opinions of probable cost and at an order-of-magnitude level. Design plans and specifications would need to be developed in order to develop more accurate costs. The values provided include both design and construction costs.

6.1 Recommended Short Term Improvements

The recommended short term improvements include items that will reduce the age of the water in the distribution system and actions that will improve the treatment chemistry. The expectation is that by reducing the age of the water, Georgetown will be able to maintain a higher chlorine residual

throughout their distribution system, thereby reducing odors generated by microbial action. A free chlorine residual of 0.5 mg/L throughout the distribution system is recommended. The treatment chemistry improvements are aimed at producing a more stable, less corrosive water. The recommended short term improvements are:

6.1.1 Distribution System Water Age Reduction

- S1 – Eliminate the elevated tank and use the concrete tanks to control the well pumps and vary their water level by six to ten feet (Estimated Cost: $60,000 – $80,000)

  The elimination of the elevated storage tank would occur in several steps. First, the valve would be shut, stopping flow to and from the tank. If the results are not desirable, the tank could simply be reincorporated into the system. After a trial period, water could be drained from the tank. At this point a bid could be obtained for demolition of the elevated tank.

  By varying the tank levels more than they are currently varied, additional water will be allowed to enter and exit the tank, which is expected to decrease water age. Currently, the well pumps are controlled by the elevated tank's water level and there is little water level change in the concrete tanks (about one foot). When the water level drops six feet in the elevated tank, the well pumps come on and the tank begins filling again. The process of varying the water level by more than six feet should be done in small increments so that all effects of each increment could be observed.

  There is a chance that system pressures would be negatively impacted, but instances of low pressure would likely be isolated to areas around the tanks. Some homes may need to install hydro-pneumatic tanks to maintain desirable pressure.

- S2 – Add electric mixers to the concrete tanks (Estimated Cost: $100,000 – $175,000)

  Electric mixers consist of an electric motor and a propeller that provide mixing to the tank. This promotes better turn over, which is expected to help reduce water age. Vendors for electric mixers include PAX and SolarBee.

- S3 – Regular maintenance flushing in eastern section of town (Estimated Cost: $18,000 – $24,000 per year)

  By creating and implementing a regular maintenance flushing program for the eastern section of town, AECOM believes water age will be reduced in that section of the town. The concept requires the opening of selected hydrants near dead ends in areas where little damage would be caused by discharging water.

6.1.2 Water Chemistry Modifications

- S4 – Re-utilize the post filter pH adjustment chemical application point and use a liquid caustic chemical instead of lime. Renovate the existing lime feed room for caustic feed (Estimated Cost: $40,000 – $60,000)

  The use of a caustic chemical to raise finished water pH would help limit the corrosivity of the water. KOH is recommended since it is already used at the wells. Please refer to Section 4.2 for more information.

- S5 – Relocate the pre-chlorine feed application point in a new vault further upstream of the filters to provide additional detention time (Note: Due to a recent high HAA measurement at the WTP, Georgetown may need to eliminate chlorine as a pre-oxidant, and use only potassium permanganate) (Estimated Cost: $20,000 – $35,000)

  Relocation of the pre-chlorine feed application point would provide additional time for oxidation of iron, which would reduce the need for as much potassium permanganate, thus

cutting chemical costs. This chemical modification was observed during jar testing and mentioned in the March 2012 technical memorandum. To implement this improvement, a new chemical injection vault would need to be installed between the wells and WTP. However, due to the high HAA measurement, pre-chlorination may need to be reduced or eliminated from the treatment process. In this case, potassium permanganate would be relied on and fed at the new vault.

6.1.3 Other Recommendations

- S6 – Perform uni-directional flushing and/or ice pigging, in selected sections of water main followed by super-chlorination of the water mains (Estimated Cost: $5,000 – $7,500 per year)

  These options would help to improve flow through the distribution system by removing scale and biofilm build up that may have accumulated in the pipes. This also has potential to alleviate the odor issue by removing scale, allowing residual chlorine to kill sulfate reducing bacteria, or by removing the bacteria all together.

- S7 – Reduce the speed of the valve actuators on the filter control valves (Estimated Cost: $20,000 – $35,000)

  By reducing the speed at which the valves open, AECOM believes that the filters may release better quality water into the distribution system during backwashing cycles. AECOM recommends that the Town discuss the modification with the filter manufacturer, Tonka, to determine what would be involved to modify the actuators before exploring other options.

6.2 Recommended Medium Term Improvements

Based upon the results observed from the short term improvements, all or only a portion of the recommended medium term improvements may need to be performed. The recommended medium term improvements are:

- M1 – Apply a corrosion inhibitor/sequesterant chemical after the filters (Estimated Cost: $20,000 – $35,000)

  The use of a corrosion inhibiting chemical may help prevent deterioration of the pipes in the distribution system and would provide a film over any remaining scales, preventing the release of SRB.

- M2 – Install automatic flushing hydrants (Estimated Cost: $17,000 – $19,000; Annual Water Cost Estimate: $9,000 per year)

  The use of automatic flushing hydrants would assist with the implementation of a regular flushing plan if it proves to be effective in improving water quality (discussed as a short term improvement).

- M3 – Use chloramines as a distribution system disinfectant (Estimated Cost: $60,000 – $95,000)

  Chloramines are more stable and longer lasting than free chlorine, so they may be able to control sulfate reducing bacteria in the distribution system better, thus reducing odor issues.

- M4 – Demolish the older concrete storage tank and construct a new storage tank on the east side of town or at the location of the demolished older concrete tank. (Estimated Cost: $2.0 – $2.8 million)

  Repairing the older concrete storage tank is not advisable due to its age and condition. If the short term water age reduction recommendations yield favorable results, the Town could demolish the older tank and build a new one in its place. If reducing water age does not improve water quality, the Town should consider constructing a new storage tank on the east side of town. A new storage tank on the east side of town may help reduce water

age in the east side of town, it would provide an additional point for chlorination, and it would enable the town to obtain water from Rowley.

6.3 Recommended Long Term Improvements

As indicated above under the recommended medium term improvements, the need for the long term improvements is based upon the performance of the improvements recommended above. The recommended long term improvements are:

- L1 – Design and construction of a clearwell/backwash water supply tank at the water treatment plant site (Estimated Cost: $2.0 – $2.8 million)

  The addition of a clearwell/backwash water supply tank at the WTP would have multiple benefits. It would serve as a dedicated source for backwash water, eliminating the potential for lower quality water to enter the system during backwash cycles. It would also provide more chlorine contact time. If this tank is constructed, it should be located at an elevation that would allow it to be utilized if a new WTP is constructed.

- L2 – Pilot test two clarification technologies for use in a new water treatment plant (Estimated Cost: $140,000 – $170,000)

  Pilot testing would be necessary if the decision was made to build a new WTP. This decision should not be made until the above improvements have been enacted and evaluated.

- L3 – Design and construction of a new water treatment plant that utilizes clarification, filtration, and a clearwell to more effectively treat Georgetown's raw water (Estimated Cost: $8 – $10 million)

  Design and construction of a new WTP is only recommended after all above improvements have been considered, implemented, and evaluated.

6.4 Recommended Payment Schedules

The following sub-section presents tables which show recommended payment schedules. These schedules present various interest rates and repayment periods that relate to the different funding options discussed in Section Five of this report. These tables were prepared with the assumption that all of the recommended improvements would be required. Each table assumes that short term improvement costs would be incurred in 2014, medium term improvement costs incurred in 2015, and long term improvement costs begin in 2016. Each table includes design and bidding costs in the first year for the new tank construction improvement and in the first two years for the new WTP improvement (Listed as M4 and L3, respectively, in the tables). The high cost from the cost range provided for each improvement was used in the tables.

Table 6-1 represents the costs incurred if the loan has a 20 year repayment period and 2% interest rate. These are the conditions under the current Massachusetts Drinking Water State Revolving Loan Fund (SRF). Table 6-2 displays the costs associated with an interest rate of 3.5% and 30 year repayment period, which are the conditions of a USDA Rural Development loan. Table 6-3 displays the annual costs under a loan with 0% interest and a repayment period of 20 years, which are the proposed conditions under the legislation being drafted currently by the Massachusetts House and Senate (SB 1880).

Table 6-1: Estimated Capital and Annual Costs for Recommended Improvements

(2% Interest, 20 Year Repayment)

No.	Recommended Improvement	Estimated Cost[1]	2014	2015	2016	2017	2018	2019	2020.....	2036	2037	2038
	SHORT TERM											
S1	Eliminate elevated tank and use concrete tanks to control well pumps	$80,000	$80,000									
S2	Install electric mixers in concrete tanks	$175,000	$175,000									
S3	Perform regular flushing	$24,000 per year[2]	$24,000	$24,000								
S4	Re-utilize the existing post filter pH ajustment point and provide a KOH storage and feed area	$60,000	$60,000									
S5	Relocate the prechlorination application point to a new vault between the wells and the WTP	$35,000	$35,000									
S6	Uni-directional flushing	$7,500 per year[2]	$7,500	$7,500								
S7	Reduce opening and closing speed of the filter valve accuators	$35,000	$35,000									
	MEDIUM TERM											
M1	Provide an application point for a corrosion inhibitor and a storage and feed area	$35,000		$35,000								
M2	Install automatic flushing hydrants	$19,000[2]		$19,000	$9,000	$9,000	$9,000	$9,000	$9,000	$9,000	$9,000	$9,000
M3	Provide an application point and a storage and feed area for ammonia for chloramine generation	$95,000		$95,000								
M4	Construct a new tank on the east side of town	$2.8 million			$140,000	$171,239	$171,239	$171,239	$171,239	$171,239	$171,239	
	LONG TERM											
L1	Design and construction of a clearwell/backwash water supply tank	$2.8 million	Assume that the clearwell and backwash supply tank are constructed as part of a WTP									
L2	Pilot test two clarification technologies	$170,000		$170,000								
L3	Design and construct a new water treatment plant	$10 million			$500,000	$500,000	$550,410	$550,410	$550,410	$550,410	$550,410	$550,410
		ESTIMATED ANNUAL TOTAL[3]	$416,500	$350,500	$649,000	$680,239	$730,649	$730,649	$730,649	$730,649	$730,649	$559,410

1. Estimated Costs including Construction, Engineering, and Contingency based on ENR, 20-City, Construction Cost Index of 9689 (10/2013)

2. Includes Town labor and water costs

3. Annual inflation is not included in values

Table 6-2: Estimated Capital and Annual Costs for Recommended Improvements

(3.5% Interest, 30 Year Repayment)

No.	Recommended Improvement	Estimated Cost[1]	2014	2015	2016	2017	2018	2019	2020.....	2024	2025.....	2048
	SHORT TERM											
S1	Eliminate elevated tank and use concrete tanks to control well pumps	$80,000	$80,000									
S2	Install electric mixers in concrete tanks	$175,000	$175,000									
S3	Perform regular flushing	$24,000 per year[2]	$24,000	$24,000								
S4	Re-utilize the existing post filter pH ajustment point and provide a KOH storage and feed area	$60,000	$60,000									
S5	Relocate the prechlorination application point to a new vault between the wells and the WTP	$35,000	$35,000									
S6	Uni-directional flushing	$7,500 per year[2]	$7,500	$7,500								
S7	Reduce opening and closing speed of the filter valve accuators	$35,000	$35,000									
	MEDIUM TERM											
M1	Provide an application point for a corrosion inhibitor and a storage and feed area	$35,000		$35,000								
M2	Install automatic flushing hydrants	$19,000[2]		$19,000	$9,000	$9,000	$9,000	$9,000	$9,000	$9,000	$9,000	$9,000
M3	Provide an application point and a storage and feed area for ammonia for chloramine generation	$95,000		$95,000								
M4	Construct a new tank on the east side of town	$2.8 million			$140,000	$152,240	$152,240	$152,240	$152,240	$152,240	$152,240	
	LONG TERM											
L1	Design and construction of a clearwell/backwash water supply tank	$2.8 million	Assume that the clearwell and backwash supply tank are constructed as part of a WTP									
L2	Pilot test two clarification technologies	$170,000		$170,000								
L3	Design and construct a new water treatment plant	$10 million			$500,000	$500,000	$489,342	$489,342	$489,342	$489,342	$489,342	$489,342
		ESTIMATED ANNUAL TOTAL[3]	$416,500	$350,500	$649,000	$661,240	$650,582	$650,582	$650,582	$650,582	$650,582	$498,342

1. Estimated Costs including Construction, Engineering, and Contingency based on ENR, 20-City, Construction Cost Index of 9689 (10/2013)

2. Includes Town labor and water costs

3. Annual inflation is not included in values

Table 6-3: Estimated Capital and Annual Costs for Recommended Improvements

(0% Interest Rate, 20 Year Repayment)

No.	Recommended Improvement	Estimated Cost[1]	2014	2015	2016	2017	2018	2019	2020.....	2036	2037	2038
	SHORT TERM											
S1	Eliminate elevated tank and use concrete tanks to control well pumps	$80,000	$80,000									
S2	Install electric mixers in concrete tanks	$175,000	$175,000									
S3	Perform regular flushing	$24,000 per year[2]	$24,000	$24,000								
S4	Re-utilize the existing post filter pH ajustment point and provide a KOH storage and feed area	$60,000	$60,000									
S5	Relocate the prechlorination application point to a new vault between the wells and the WTP	$35,000	$35,000									
S6	Uni-directional flushing	$7,500 per year[2]	$7,500	$7,500								
S7	Reduce opening and closing speed of the filter valve accuators	$35,000	$35,000									
	MEDIUM TERM											
M1	Provide an application point for a corrosion inhibitor and a storage and feed area	$35,000		$35,000								
M2	Install automatic flushing hydrants	$19,000[2]		$19,000	$9,000	$9,000	$9,000	$9,000	$9,000	$9,000	$9,000	$9,000
M3	Provide an application point and a storage and feed area for ammonia for chloramine generation	$95,000		$95,000								
M4	Construct a new tank on the east side of town	$2.8 million			$140,000	$140,000	$140,000	$140,000	$140,000	$140,000	$140,000	
	LONG TERM											
L1	Design and construction of a clearwell/backwash water supply tank	$2.8 million	Assume that the clearwell and backwash supply tank are constructed as part of a WTP									
L2	Pilot test two clarification technologies	$170,000		$170,000								
L3	Design and construct a new water treatment plant	$10 million			$500,000	$450,000	$450,000	$450,000	$450,000	$450,000	$450,000	$450,000
		ESTIMATED ANNUAL TOTAL[3]	$416,500	$350,500	$649,000	$599,000	$599,000	$599,000	$599,000	$599,000	$599,000	$459,000

1. Estimated Costs including Construction, Engineering, and Contingency based on ENR, 20-City, Construction Cost Index of 9689 (10/2013)

2. Includes Town labor and water costs

3. Annual inflation is not included in values

6.5 Recommendation Summary

The tables within this section provide the Town with order-of-magnitude future annual costs if all of the recommended improvements are implemented. These tables also show how the payment terms of the selected funding source can significantly impact the annual costs.

We recommend that the Town begin implementing the identified short term improvements as soon as practical, and complete the implementation by mid-2014. Evaluating the progress of the improvements will be important. Therefore, the water quality should be sampled at the locations that were identified in 2012 and analyzed for the constituents that were recommended at that time. The concentration of the free chlorine residual will be an important measurement.

The implementation of the medium term improvements should progress based on the results of the short term improvements. The medium term improvements include the construction of a new water storage tank which will be a significant capital expense. At that time, the Town will need to investigate and decide upon funding sources that provide the best value.

If the short term and medium term improvements do not result in a distribution system water quality that satisfies the customers of Georgetown and meets State and Federal Standards, the long term recommendations that include a new water treatment plant will need to be considered. If needed, a water treatment plant will be a major capital expense for the Town, and as mentioned above, the funding source will need to be selected carefully so that it matches the Towns available payment resources. Now that future annual costs have been estimated, the Town should evaluate its current water rate structure and consider increasing rates soon to help dampen future impacts.